Centaur C4G

designplan

datasheet

The Centaur C4G is a 4” diameter ingrade uplight made of stainless steel that is suitable for power washing and is driveover rated up to 11,000 lbs.

Fixture Dimensions
Ø4.0” x 4.0” h
See Full Drawing on page 2

TECHNICAL DATA

Wattage / Input	3W (120-277VAC)
Power Supply	Integral 120-277VAC Non-Dim
Construction	Body and Trim: Stainless Steel 304 Alloy Jbox: Cast Stainless Steel Lens: 0.4” Tempered Glass Lens Frame: Threaded Bottlecap
CCT	3000K, 4000K
CRI	CRI>80
Delivered Lumens	360 lm (3000K)
Efficacy	120 lm/W, 86.7 lm/W
Optics	None, 6°, 25°, 6°x25°
Finishes	Stainless Steel 304 Alloy
Fixture Dimensions	Ø4.0” x 4.0” h
LED Source	3 x 1W Cree XPE LED
IP Rating	IP68, IP69
Driveover Rating	11,000 lbs

ORDERING INFORMATION

Example: C4G-L-330-4-SS-1-C-T-0. Accessories ordered separately.

C4G-L	-		-	4	-	SS	-		-	C	-		-	0

Model #	Watts/CCT	Body	Finish	Optics	Driver	Lens	Options
C4G-L	**330** - 3W, 3000K **340** - 3W, 4000K	**4** - Recessed box with conduit entries	**SS** - Stainless Steel	1 - 6° **3** - 25° **4** - 6°x25° Elliptical **0** - None **Note:** *Optic options 1, 3 and 4 can only be used with “T” lens. Optic 0 (None) can be used with any of the others.*	**C** - Integral 120-277VAC Non-Dim	**T** - Clear Tempered Glass **G** - Frosted Tempered Glass **K** - Flash White BTM & Clear Top **J** - Flash White BTM & Non-Skid Top Pattern **Q** - Non-Skid Patterned Tempered Glass **Note:** *Optic options 1, 3 and 4 can only be used with “T” lens. Optic 0 (None) can be used with any of the others.*	**0** - None **Q** - Honeycomb Louver **Note: Rubber Lens Holder PP600167 included w/ options**

Job Name/Date:

Fixture Type Designation:

sales@designplan.com
www.designplan.com

79 Trenton Avenue, Frenchtown NJ 08825
© Copyright 2019 Designplan Lighting, Inc.
Published: November 13, 2024
P: 908-996-7710
F: 908-996-7042

FIXTURE DIMENSIONS

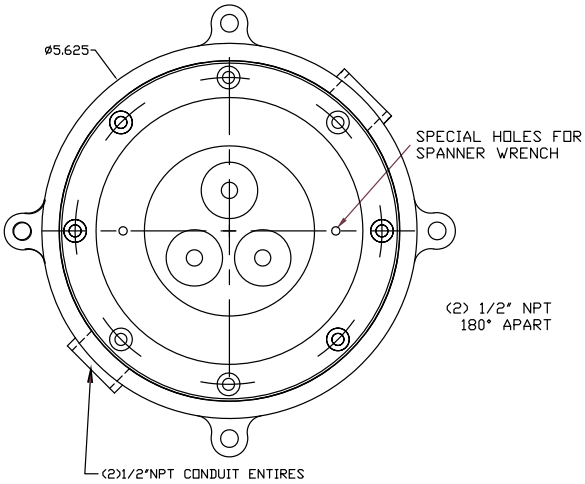

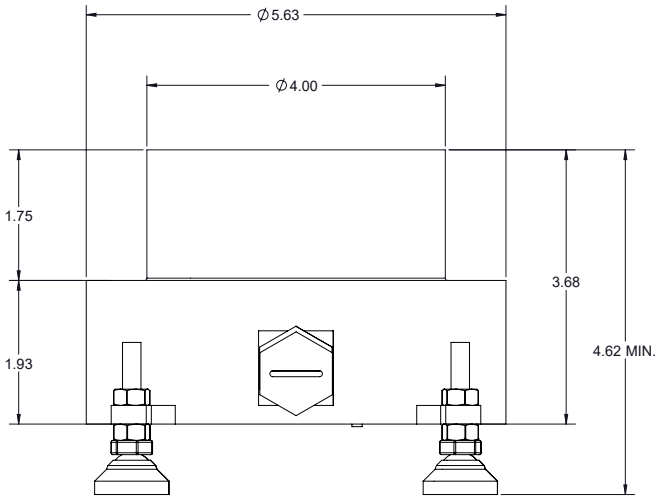

ACCESSORIES - Installation

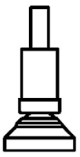

LL301 - Optional
Leveling Pad
Set of 4

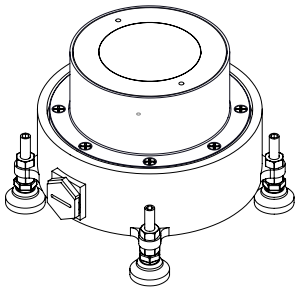

Job Name/Date:

Fixture Type Designation:

© Copyright 2019 Designplan Lighting, Inc.

Published: November 13, 2024