# MORPHIS 4 WALL - CORNER

REMOTE 700mA

installation instructions

## INSTRUCTIONS PERTAINING TO RISK OF FIRE OR INJURY TO PERSONS. READ ALL INSTRUCTIONS. IMPORTANT SAFETY INSTRUCTIONS. SAVE THESE INSTRUCTIONS.

### DANGER - RISK OF SHOCK - DISCONNECT POWER BEFORE INSTALLATION! Please read all instructions before installation.

- Keep these instructions for future reference.
- Must be installed by a qualified electrician in accordance with national andlocal standards. Designplan is not responsible for fixtures installed withoutregard to these standards.
- The main power connection must be in accordance with local electricalcodes.
- Unauthorized alterations or tampering of product voids warranty.
- Suitable for OUTDOOR applications.



**IP65 IK08**

## Electrical Connections:

- LED lights must be **connected in series** respecting polarities.
- **CHOOSE POWER SUPPLY ACCORDINGLY**. Please consider the voltage through which fixtures are fed as well as the max power consumption.
- **Connect power only if all fixtures are connected.**
- The power supplies MUST be installed in aerated rooms, far from heat sources. Overworking or lack of air circulation will not permit natural dissipation.
- The electronic power supply is current-stable, therefore it partially compensates the voltage-drop problems related to the cable length; we suggest not to exceed 100 ft.
- Use only Class 2 type electronic power supply.
- Never use switches on secondary circuit.

**ATTENTION:** **For Wall/Ceiling** - It is the contractor's responsibility to caulk around all the edges between the fixture and the mounting surface to satisfy wet label requirements.
Contractor **MUST** use gel-filled wire nuts.

## Maintenance

Scheduled maintenance must be carried out once a year on all lighting devices, regardless of appliance class and type of use. It must include the following operations:

- Periodically clean fixtures to remove dirt from gratings and screw heads.
- Check tightness of screws on various parts of the device.
- Check that all cable glands and cables are intact and tight. Check that the glass or plastic screen is intact, and replace it if broken or damaged.
- The internal components such as the ballast, driver, washers and screws must not show clear signs of oxidation or rust. Clear traces of rust and oxidation will indicate the presence of water inside the device.
- In the case of damage, the components must be replaced by original components or spare parts.

**sales@designplan.com**
www.designplan.com

**79 Trenton Avenue, Frenchtown NJ 08825**
© Copyright 2026 Designplan Lighting, Inc.
**P: 908-996-7710**
**F: 908-996-7042**

**FIXTURE DIMENSIONS:**

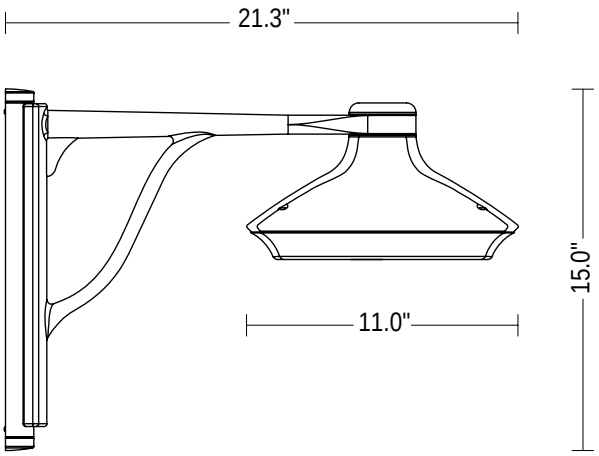




**Corner Bracket 00596-__(W. FINISHING COLOR)**



© Copyright 2026 Designplan Lighting, Inc.

## INSTALLATION INSTRUCTION:

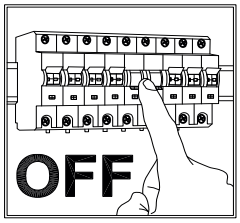


- It is the contractor's responsibility to install Remote Driver in a suitable electrical enclosure.

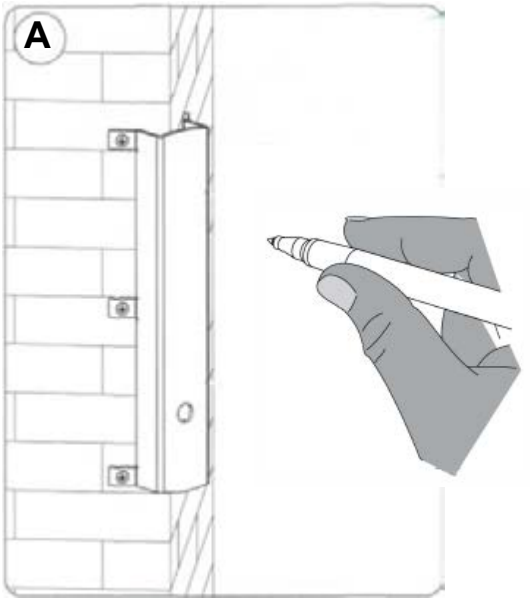


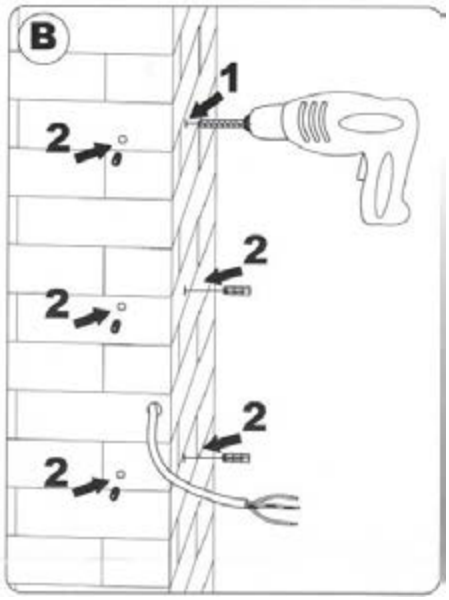


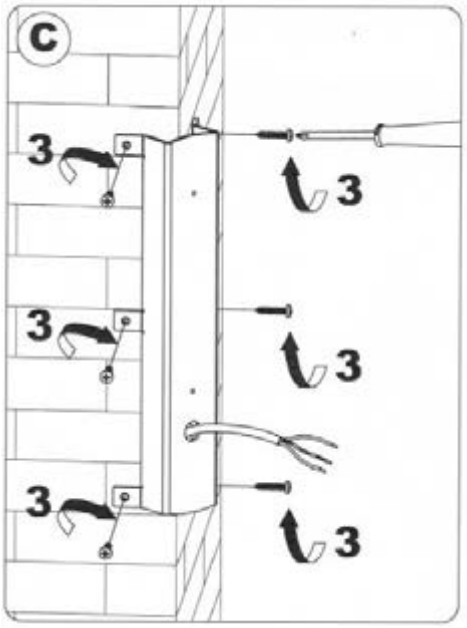


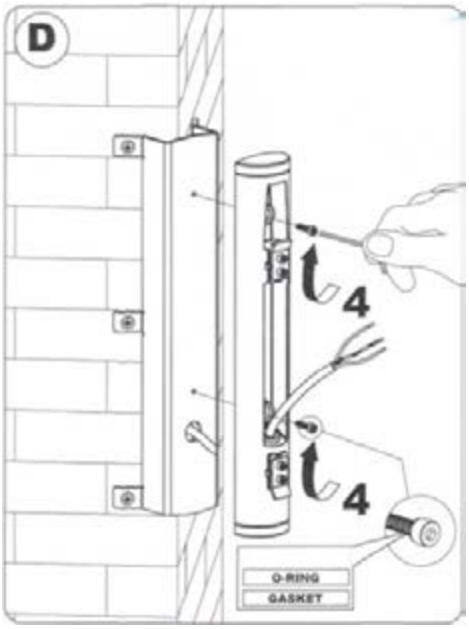



sales@designplan.com
www.designplan.com

79 Trenton Avenue, Frenchtown NJ 08825


© Copyright 2026 Designplan Lighting, Inc.


P: 908-996-7710
F: 908-996-7042

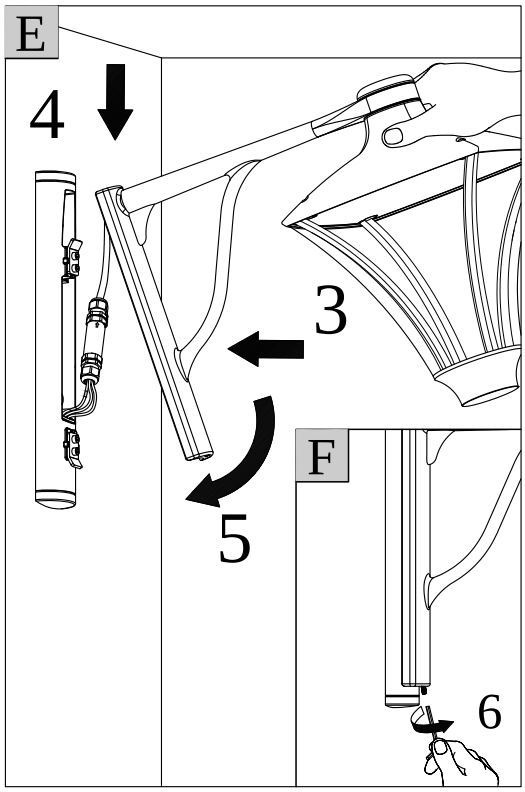


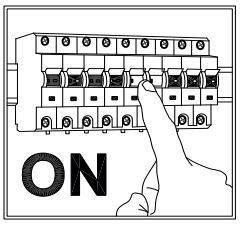



**sales@designplan.com**
www.designplan.com

**79 Trenton Avenue, Frenchtown NJ 08825**


© Copyright 2026 Designplan Lighting, Inc.


**P: 908-996-7710**
**F: 908-996-7042**

## Wiring Diagram

700mA
(Static White Series Connection)

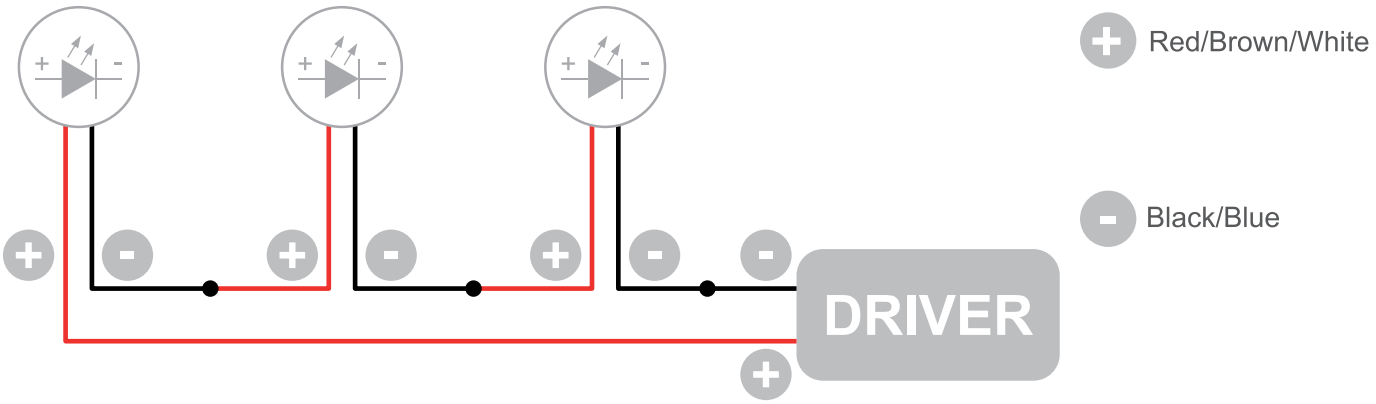


⚠ The individual lamps must be connected in series.
Only power up the system once all the lamps have been connected.

- LED lights work at constant current. When choosing a power supply unit, you need to consider the current by which the LEDs are driven and their maximum power consumption.
- Only power up the system once all the lamps are connected. Connecting an individual lamp to an active power supply may cause the lamp to break due to over-voltage.
- The electronic power supply is constant current, so to a certain extent it automatically compensates the voltage drop associated with cable length; however, we advise not exceeding 100 feet.
- Lamps and power supply units must be installed in well-ventilated boxes or locations to allow a natural heat diffusion and avoid the devices overheating.
- On the power system, install a surge protection device to reduce the intensity of any voltage spikes to protect the lighting fixtures from the risk of damage.
- Fixture NOT suitable for covering with thermally insulating material.


**sales@designplan.com**
www.designplan.com

**79 Trenton Avenue, Frenchtown NJ 08825**


© Copyright 2026 Designplan Lighting, Inc.


**P: 908-996-7710**
**F: 908-996-7042**