QUBO MAXI COB

datasheet

The Qubo Maxi COB is a square, outdoor LED floodlight suitable for installation on a façade/wall with a U-shaped fixing bracket allowing vertical adjustment of +90° / -40°. It has 3 standard finishes and 3 optics options.



Fixture Dimensions

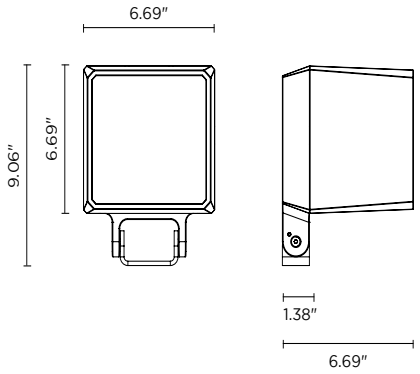

TECHNICAL DATA

Wattage / Input	42W (120VAC)
Power Supply	Integral 0-10V Dimming
Construction	Body: Die-Cast Copper-Free Aluminum Screws: Stainless Steel Lens: Tempered, Safety Glass Cable Length: 3.28” included
CCT	3000K, 4000K
CRI	>80
Lumen Output	4752 lm (3000K, 35°)
Efficacy	113.1 lm/W (3000K, 35°)
Optics	3 Standard (see below)
Finishes	3 Standard, Custom RAL (see below)
Fixture Dimensions	6.69” l x 6.69” w x 9.06” h
Fixture Weight	9.92 lbs
LED Source	1 COB CREE “CXB 2540” LED
IP Rating	IP66
Impact Rating	IK10

ORDERING INFORMATION

Example: 101604P-30-14-08. Accessories ordered separately.

101604P	-		-		-	

Model No.	**CCT**	**Optics**	**Finish**
101604P	**27** - 2700K	**14** - 14°	**01** - Textured Grey (RAL 9006)
	30 - 3000K	**35** - 35°	**02** - Anthracite Grey (RAL 7016)
	40 - 4000K	**55** - 55°	**03** - Matte Black (on request)

Job Name/Date:

Fixture Type Designation:

sales@designplan.com
www.designplan.com

79 Trenton Avenue, Frenchtown NJ 08825

© Copyright 2019 Designplan Lighting, Inc.

Published: November 24, 2026

P: 908-996-7710
F: 908-996-7042

QUBO MAXI COB

datasheet

ACCESSORIES

Installation



AC044
Ground Spike

Anti-Glare

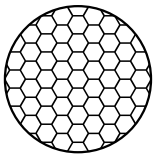

AC074
Honeycomb Louver



AC078
Anti-Glare Visor



AC038
Tree Strap
for Ring Series

PHOTOMETRIC DATA

Note: All photometry is 3000K

Maximum Candela = 45212.2

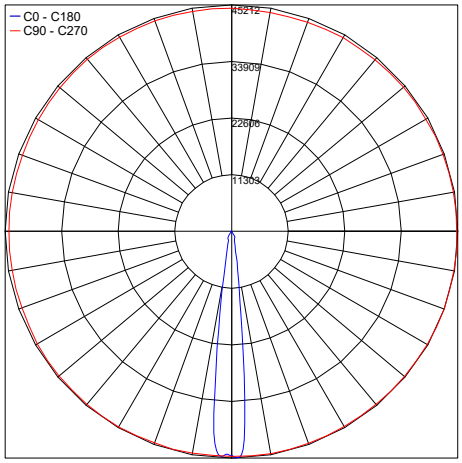

PHOTOMETRIC FILENAME : QUBO MAXI COB 14° - 101403P.IES

Maximum Candela = 11965.4

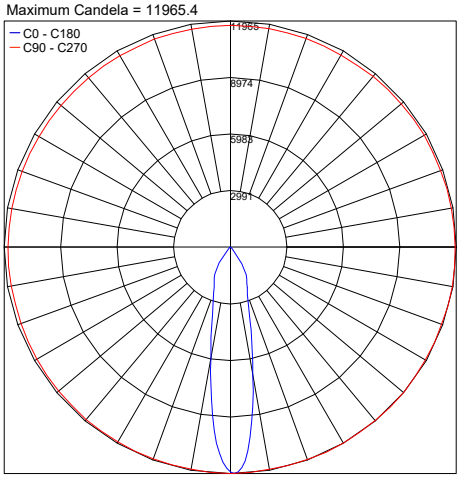

PHOTOMETRIC FILENAME : QUBO MAXI COB 35° - 101403P.IES

Maximum Candela = 6902.9

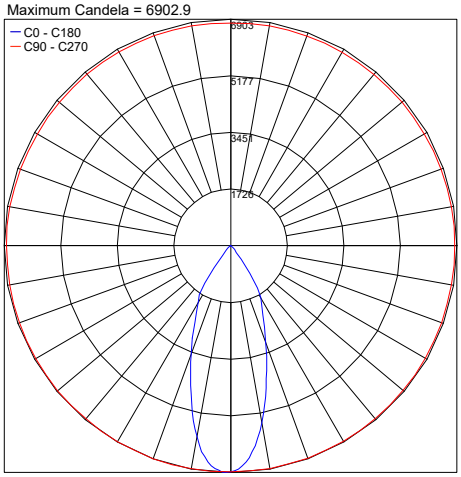

PHOTOMETRIC FILENAME : QUBO MAXI COB 55° - 101403P.IES

Job Name/Date:

Fixture Type Designation:

sales@designplan.com
www.designplan.com

79 Trenton Avenue, Frenchtown NJ 08825

© Copyright 2019 Designplan Lighting, Inc.

Published: November 24, 2026

P: 908-996-7710
F: 908-996-7042