QUBO MAXI HP

datasheet

The Qubo Maxi HP is a high power, square, outdoor LED floodlight suitable for installation on a façade/wall with a U-shaped fixing bracket allowing vertical adjustment of +90° / -40°. It has 3 standard finishes and 3 optics options.



Fixture Dimensions

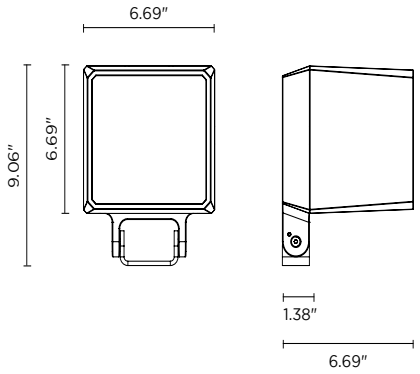

TECHNICAL DATA

Wattage / Input	38W (120VAC)
Power Supply	Integral 0-10V Dimming
Construction	Body: Die-Cast Copper-Free Aluminum Screws: Stainless Steel Lens: Tempered, Safety Glass Cable Length: 3.28” included
CCT	3000K, 4000K
CRI	>80
Lumen Output	4260 lm (3000K, 10°)
Efficacy	112.1 lm/W (3000K, 10°)
Optics	3 Standard (see below)
Finishes	3 Standard, Custom RAL (see below)
Fixture Dimensions	6.69” l x 6.69” w x 9.06” h
Fixture Weight	9.92 lbs
LED Source	6 CREE “XHP35” LED
IP Rating	IP66
Impact Rating	IK10

ORDERING INFORMATION

Example: 101607P-30-10-01. Accessories ordered separately.

101607P	-		-		-	

Model No.	CCT	Optics	Finish
101607P	**27** - 2700K **30** - 3000K **40** - 4000K	**04** - 4° **10** - 10° **28** - 28° **55** - 55°	**01** - Textured Grey (RAL 9006) **02** - Anthracite Grey (RAL 7016) **03** - Matte Black (on request)

Job Name/Date:

Fixture Type Designation:

sales@designplan.com
www.designplan.com

79 Trenton Avenue, Frenchtown NJ 08825

© Copyright 2019 Designplan Lighting, Inc.

Published: November 24, 2026

P: 908-996-7710
F: 908-996-7042

QUBO MAXI HP

designplan

datasheet

ACCESSORIES

Installation



AC044
Ground Spike

Anti-Glare

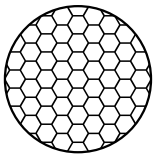

AC074
Honeycomb Louvrer



AC078
Anti-Glare Visor



AC038
Tree Strap
for Ring Series

PHOTOMETRIC DATA

Note: All photometry is 3000K

Maximum Candela = 46182.5

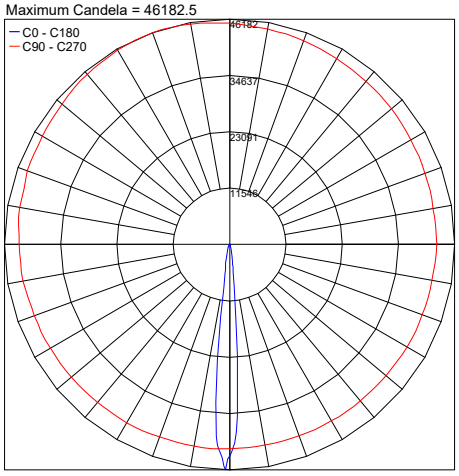

PHOTOMETRIC FILENAME : QUBO MAXI HP 3000K 4° 38W.IES

Maximum Candela = 30699.8

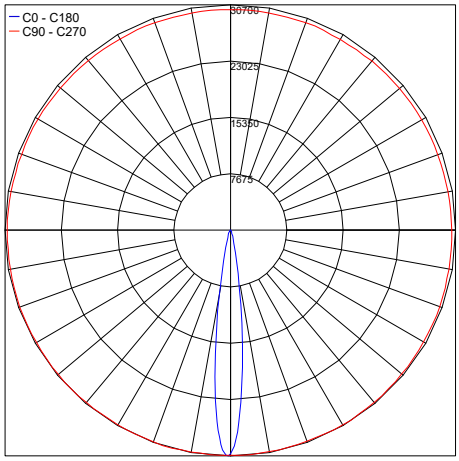

PHOTOMETRIC FILENAME : QUBO MAXI HP 3000K 10° 38W.IES

Maximum Candela = 12814.7

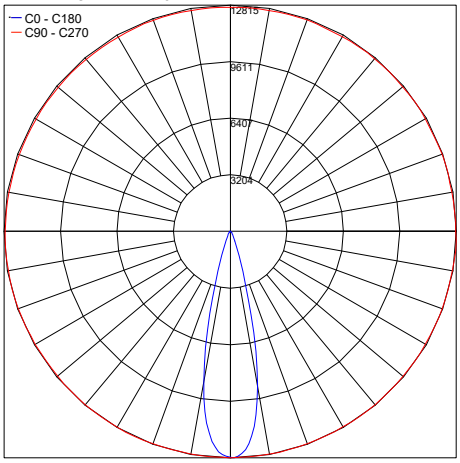

PHOTOMETRIC FILENAME : QUBO MAXI HP 3000K 28° 38W.IES

Job Name/Date:

Fixture Type Designation:

sales@designplan.com
www.designplan.com

79 Trenton Avenue, Frenchtown NJ 08825

© Copyright 2019 Designplan Lighting, Inc.

Published: November 24, 2026

P: 908-996-7710
F: 908-996-7042