QUBO MEDIUM RGBW

datasheet

The Qubo Medium RGBW is an outdoor LED floodlight suitable for installation on a façade/wall, with U shape fixing bracket allowing vertical adjustment of +90° / -40°. It has a DMX interface and comes in 3 standard finishes and 3 optics options.



Fixture Dimensions

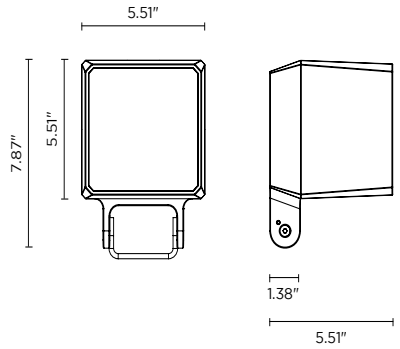

TECHNICAL DATA

Wattage / Input	14W (24VDC)
Power Supply	Remote driver with DMX integrated into fixture See page 2 for remote power supplies
Construction	Body: Die-Cast Copper-Free Aluminum Screws: Stainless Steel Lens: Tempered, Safety Glass Cable Length: 3.28” included
CCT	RGBW - DMX Control Built Into Fixture
CRI	>80
Lumen Output	468 lm (25°)
Efficacy	33.4 lm/W (25°)
Optics	3 Standard (see below)
Finishes	3 Standard, Custom RAL (see below)
Fixture Dimensions	5.51” l x 5.51” w x 7.87” h
Fixture Weight	6.83 lbs
LED Source	3 x CREE “XML” COLOR RGBW LED
IP Rating	IP66
Impact Rating	IK10

ORDERING INFORMATION

Example: 101606RGBWP-12-02. Power Supplies / Accessories ordered separately.

101606RGBWP	-		-	

Model No.	Optics	Finish
101606RGBWP	**12** - 12°	**01** - Textured Grey (RAL 9006)
	25 - 25°	**02** - Anthracite Grey (RAL 7016)
	35 - 35°	**03** - Matte Black (on request)

Job Name/Date:

Fixture Type Designation:

sales@designplan.com
www.designplan.com

79 Trenton Avenue, Frenchtown NJ 08825

© Copyright 2019 Designplan Lighting, Inc.

Published: November 24, 2026

P: 908-996-7710
F: 908-996-7042

QUBO MEDIUM RGBW

datasheet

SUGGESTED POWER SUPPLIES

24VDC

Part Number	Description	Input/Output	# of Fixtures
PPLT00132	Non-Dim	120277VAC to 24VDC, 88W, Class 2, IP65	1-5

For other power supply options consult factory.

ACCESSORIES

Installation



AC044
Ground Spike

Anti-Glare

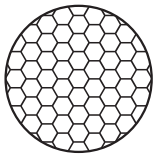

AC073
Honeycomb Louvrer



AC038
Tree Strap
for Ring Series



AC077
Anti-Glare Visor

ACCESSORIES

Controllers (RGBW)

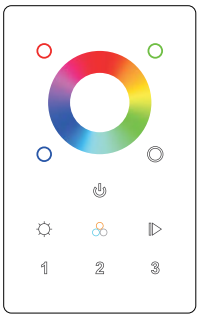

PPWD00570 - RGBW DMX512+Wifi Controller
Touch Sensitive
Can be controlled by WiFi
Controls 3 zones synchronously and separately

PHOTOMETRIC DATA

Coming Soon

Job Name/Date:

Fixture Type Designation:

sales@designplan.com
www.designplan.com

79 Trenton Avenue, Frenchtown NJ 08825
© Copyright 2019 Designplan Lighting, Inc.
Published: November 24, 2026
P: 908-996-7710
F: 908-996-7042