PLIN 2.1
4000K, 12W, anthracite

designplan™

79 Trenton Avenue
Frenchtown, NJ 08825

www.designplan.com

Tel: (908) 996-7710
Fax: (908) 996-7042

PLIN

BOLLARDS FOR OUTDOOR APPLICATIONS

2700K 3000K 4000K

SQUARE HEAD

diffuse

PLIN 1.0
12W 24VDC
h 11.81"

PLIN 1.1
12W 24VDC
h 23.62"

PLIN 1.2
12W 24VDC
h 31.50"

asymmetrical
diffuse

PLIN 2.0
12W 24VDC
h 10.24"

PLIN 2.1
12W 24VDC
h 22.05"

PLIN 2.2
12W 24VDC
h 29.92"

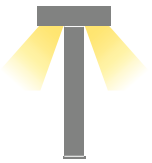

asymmetrical
diffuse

PLIN 3.0
24W 24VDC
h 10.24"

PLIN 3.1
24W 24VDC
h 22.05"

PLIN 3.2
24W 24VDC
h 29.92"

ROUND HEAD

diffuse

PLIN 4.0
8W 24VDC
h 12.60"

PLIN 4.1
8W 24VDC
h 24.41"

PLIN 4.2
8W 24VDC
h 32.28"

asymmetrical

PLIN 5.0
8W 24VDC
h 11.22"

PLIN 5.1
8W 24VDC
h 23.03"

PLIN 5.2
8W 24VDC
h 30.91"

PLIN 1

PLIN 1.0

v
PLIN 1.0
3000K, 12W, anthracite

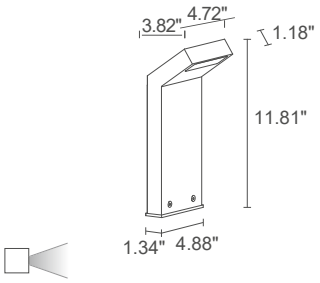

2.9 lbs IP65 IK08

POWER / POWER SUPPLY **MODEL NO.**	12W 24VDC h 11.81" **PN1010 A E** White **PN1010 A F** Gray **PN1010 A H** Anthracite **PN1010 A T** Cor-ten
LED COLOR	**F** - 2700K **5** - 3000K **9** - 4000K
OPTICS	diffuse
LUMEN OUTPUT AT SOURCE	1242 lm (3000K)
DELIVERED LUMEN OUTPUT	558 lm (3000K)
NO. AND TYPE OF LED	18 mid-power LEDs 3-step MacAdam, 50000h L85 B10 (Ta 25°C)
MATERIAL	head in die-cast aluminum, column in aluminum lens in serigraphed, tempered, extra-clear microprismatic glass
POWER SUPPLY UNIT	remote power supply required, not included
MOUNTING	surface mounted (ground)
NOTES	non-standard heights available on request

PLIN 1.1

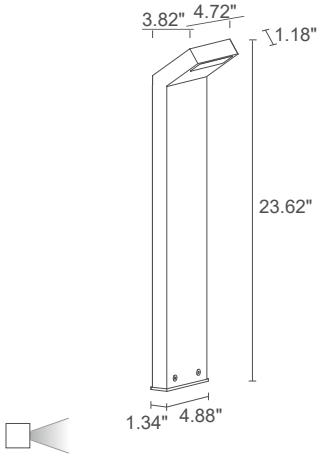

4.9 lbs IP65 IK08

12W 24VDC h 23.62"

PN1110 A E White
PN1110 A F Gray
PN1110 A H Anthracite
PN1110 A T Cor-ten

F - 2700K
5 - 3000K
9 - 4000K

diffuse

1242 lm (3000K)

558 lm (3000K)

18 mid-power LEDs
3-step MacAdam, 50000h L85 B10 (Ta 25°C)

head in die-cast aluminum, column in aluminum
lens in serigraphed, tempered, extra-clear
microprismatic glass

remote power supply required, not included

surface mounted (ground)

non-standard heights available
on request

PLIN 1.2

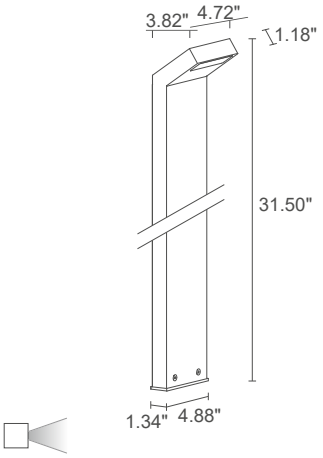

5.5 lbs IP65 IK08

12W 24VDC h 31.50"

PN1210 A E White
PN1210 A F Gray
PN1210 A H Anthracite
PN1210 A T Cor-ten

F - 2700K
5 - 3000K
9 - 4000K

diffuse

1242 lm (3000K)

558 lm (3000K)

18 mid-power LEDs
3-step MacAdam, 50000h L85 B10 (Ta 25°C)

head in die-cast aluminum, column in aluminum
lens in serigraphed, tempered, extra-clear
microprismatic glass

remote power supply required, not included

surface mounted (ground)

non-standard heights available
on request

PLIN 2

PLIN 2.0

PLIN 2.2
3000K, 12W, anthracite
ICE LED 1.0
2700K, 1W

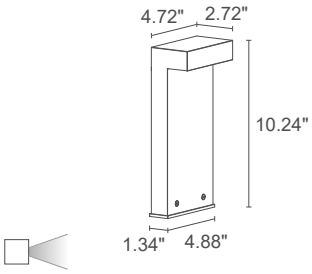

GERMAN DESIGN AWARD SPECIAL 2019

3.1 lbs IP65 IK08

POWER / POWER SUPPLY MODEL NO.	12W 24VDC h 10.24" **PN2010 A E** White **PN2010 A F** Gray **PN2010 A H** Anthracite **PN2010 A T** Cor-ten
LED COLOR	**F** - 2700K **5** - 3000K **9** - 4000K
OPTICS	asymmetrical diffuse
LUMEN OUTPUT AT SOURCE	1242 lm (3000K)
DELIVERED LUMEN OUTPUT	492 lm (3000K)
NO. AND TYPE OF LED	18 mid-power LEDs 3-step MacAdam, 50000h L85 B10 (Ta 25°C)
MATERIAL	head and column in aluminum lens in serigraphed, tempered transparent extra-clear glass
POWER SUPPLY UNIT	remote power supply required, not included
MOUNTING	surface mounted (ground)
NOTES	non-standard heights available on request

PLIN 2.1

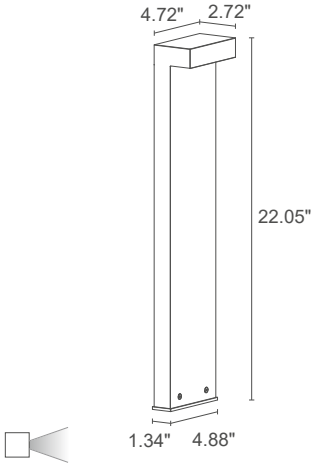

GERMAN DESIGN AWARD SPECIAL 2019

4.2 lbs IP65 IK08

12W 24VDC h 22.05"

PN2110 A E White
PN2110 A F Gray
PN2110 A H Anthracite
PN2110 A T Cor-ten

F - 2700K
5 - 3000K
9 - 4000K

asymmetrical diffuse

1242 lm (3000K)

492 lm (3000K)

18 mid-power LEDs
3-step MacAdam, 50000h L85 B10 (Ta 25°C)

head and column in aluminum
lens in serigraphed, tempered transparent
extra-clear glass

remote power supply required, not included

surface mounted (ground)

non-standard heights available
on request

PLIN 2.2

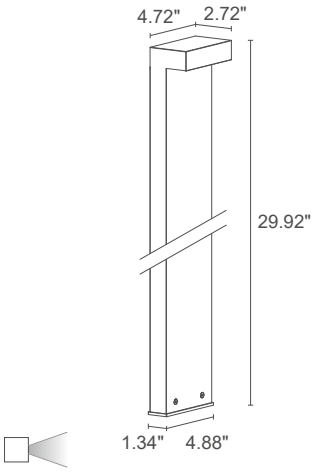

GERMAN DESIGN AWARD SPECIAL 2019

4.3 lbs IP65 IK08

12W 24VDC h 29.92"

PN2210 A E White
PN2210 A F Gray
PN2210 A H Anthracite
PN2210 A T Cor-ten

F - 2700K
5 - 3000K
9 - 4000K

asymmetrical diffuse

1242 lm (3000K)

492 lm (3000K)

18 mid-power LEDs
3-step MacAdam, 50000h L85 B10 (Ta 25°C)

head and column in aluminum
lens in serigraphed, tempered transparent
extra-clear glass

remote power supply required, not included

surface mounted (ground)

non-standard heights available
on request

PLIN 3

PLIN 3.0

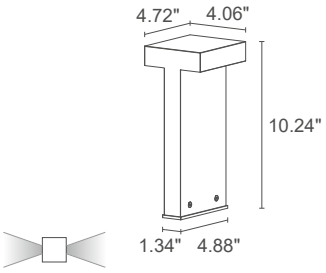

4.0 lbs **IP65** **IK08**

POWER / POWER SUPPLY **MODEL NO.**	24W 24VDC h 10.24" **PN3010 A E** White **PN3010 A F** Gray **PN3010 A H** Anthracite **PN3010 A T** Cor-ten
LED COLOR	**F** - 2700K **5** - 3000K **9** - 4000K
OPTICS	asymmetrical diffuse
LUMEN OUTPUT AT SOURCE	1242 lm (3000K) per beam
DELIVERED LUMEN OUTPUT	492 lm (3000K) per beam
NO. AND TYPE OF LED	36 mid-power LEDs 3-step MacAdam, 50000h L85 B10 (Ta 25°C)
MATERIAL	head and column in aluminum lens in serigraphed, tempered transparent extra-clear glass
POWER SUPPLY UNIT	remote power supply required, not included
MOUNTING	surface mounted (ground)
NOTES	non-standard heights available on request

PLIN 3.1
4000K, 24W, anthracite

PLIN 3.1

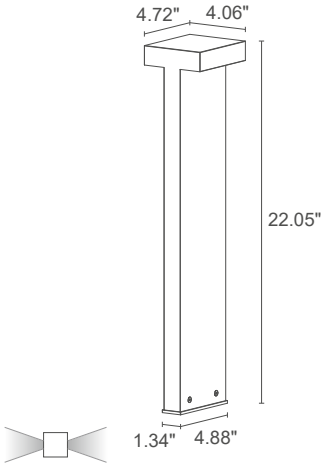

4.9 lbs IP65 IK08

24W 24VDC h 22.05"

PN3110 A E	White
PN3110 A F	Gray
PN3110 A H	Anthracite
PN3110 A T	Cor-ten

F - 2700K
5 - 3000K
9 - 4000K

asymmetrical diffuse

1242 lm (3000K) per beam

492 lm (3000K) per beam

36 mid-power LEDs
3-step MacAdam, 50000h L85 B10 (Ta 25°C)

head and column in aluminum
lens in serigraphed, tempered transparent
extra-clear glass

remote power supply required, not included

surface mounted (ground)

non-standard heights available
on request

PLIN 3.2

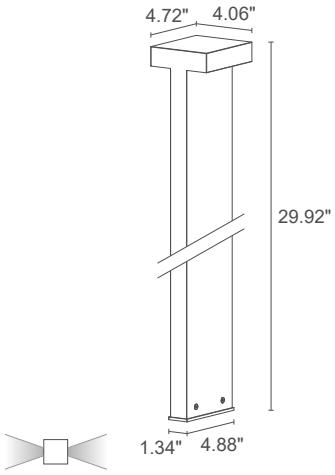

5.2 lbs IP65 IK08

24W 24VDC h 29.92"

PN3210 A E	White
PN3210 A F	Gray
PN3210 A H	Anthracite
PN3210 A T	Cor-ten

F - 2700K
5 - 3000K
9 - 4000K

asymmetrical diffuse

1242 lm (3000K) per beam

492 lm (3000K) per beam

36 mid-power LEDs
3-step MacAdam, 50000h L85 B10 (Ta 25°C)

head and column in aluminum
lens in serigraphed, tempered transparent
extra-clear glass

remote powers supply required, not included

surface mounted (ground)

non-standard heights available
on request

PLIN 4

PLIN 4.0

v
PLIN 4.0
4000K, 8W, anthracite

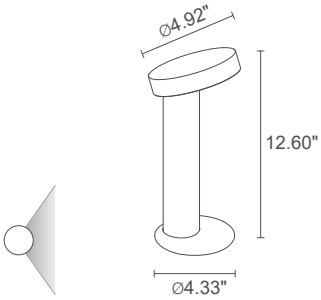

4.0 lbs IP65 IK07

POWER / POWER SUPPLY MODEL NO.	8W 24VDC h 12.60" **PN40100 D E** White **PN40100 D F** Gray **PN40100 D H** Anthracite **PN40100 D T** Cor-ten
LED COLOR	**F** - 2700K **5** - 3000K **9** - 4000K
OPTICS	diffuse
LUMEN OUTPUT AT SOURCE	488 lm (3000K)
DELIVERED LUMEN OUTPUT	423 lm (3000K)
NO. AND TYPE OF LED	1 power LED 3-step MacAdam, 50000h L90 B10 (Ta 25°C)
MATERIAL	head in aluminum, column in stainless steel lens in serigraphed, tempered transparent extra-clear glass
POWER SUPPLY UNIT	remote power supply required, not included
MOUNTING	surface mounted (ground)
NOTES	non-standard heights available on request

PLIN 4.1

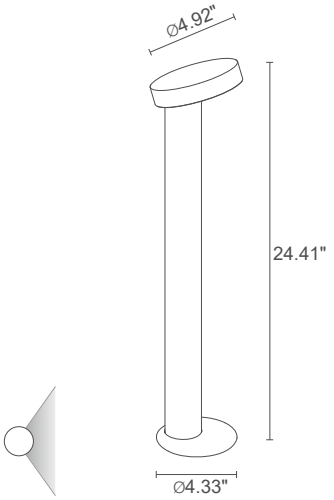

5.8 lbs IP65 IK07

	8W 24VDC h 24.41" **PN41100 D E** White **PN41100 D F** Gray **PN41100 D H** Anthracite **PN41100 D T** Cor-ten
	F - 2700K **5** - 3000K **9** - 4000K
	diffuse
	488 lm (3000K)
	423 lm (3000K)
	1 power LED 3-step MacAdam, 50000h L90 B10 (Ta 25°C)
	head in aluminum, column in stainless steel lens in serigraphed, tempered transparent extra-clear glass
	remote power supply required, not included
	surface mounted (ground)
	non-standard heights available on request

PLIN 4.2

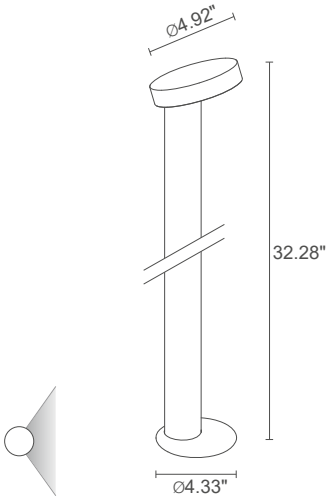

6.8 lbs IP65 IK07

	8W 24VDC h 32.28" **PN42100 D E** White **PN42100 D F** Gray **PN42100 D H** Anthracite **PN42100 D T** Cor-ten
	F - 2700K **5** - 3000K **9** - 4000K
	diffuse
	488 lm (3000K)
	423 lm (3000K)
	1 power LED 3-step MacAdam, 50000h L90 B10 (Ta 25°C)
	head in aluminum, column in stainless steel lens in serigraphed, tempered transparent extra-clear glass
	remote power supply required, not included
	surface mounted (ground)
	non-standard heights available on request

PLIN 5

PLIN 5.0

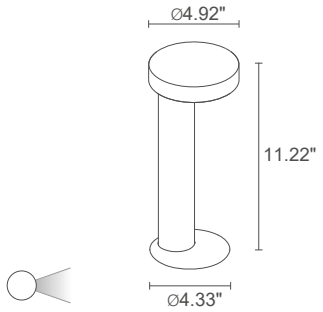

v
PLIN 5.1
4000K, 8W, anthracite

4.0 lbs **IP65** **IK07**

POWER / POWER SUPPLY MODEL NO.	8W 24VDC h 11.22" **PN50100 A E** White **PN50100 A F** Gray **PN50100 A H** Anthracite **PN50100 A T** Cor-ten
LED COLOR	**F** - 2700K **5** - 3000K **9** - 4000K
OPTICS	asymmetrical
LUMEN OUTPUT AT SOURCE	488 lm (3000K)
DELIVERED LUMEN OUTPUT	173 lm (3000K)
NO. AND TYPE OF LED	1 power LED 3-step MacAdam, 50000h L90 B10 (Ta 25°C)
MATERIAL	head in aluminum, column in stainless steel lens in serigraphed, tempered transparent extra-clear glass
POWER SUPPLY UNIT	remote power supply required, not included
MOUNTING	surface mounted (ground)
NOTES	non-standard heights available on request

PLIN 5.1

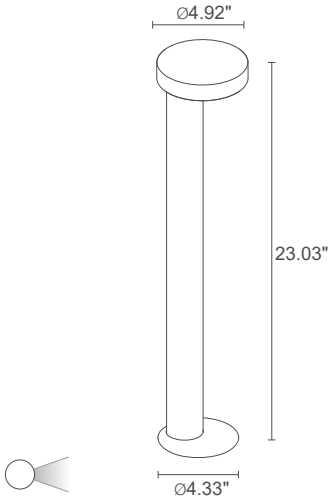

5.5 lbs IP65 IK07

8W 24VDC h 23.03"

PN51100 A E	White
PN51100 A F	Gray
PN51100 A H	Anthracite
PN51100 A T	Cor-ten

F - 2700K
5 - 3000K
9 - 4000K

asymmetrical

488 lm (3000K)

173 lm (3000K)

1 power LED
3-step MacAdam, 50000h L90 B10 (Ta 25°C)

head in aluminum, column in stainless steel lens in serigraphed, tempered transparent extra-clear glass

remote power supply required, not included

surface mounted (ground)

non-standard heights available on request

PLIN 5.2

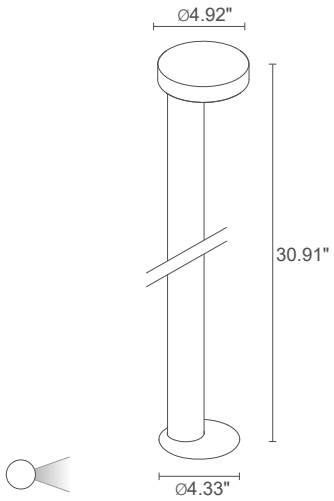

6.8 lbs IP65 IK07

8W 24VDC h 30.91"

PN52100 A E	White
PN52100 A F	Gray
PN52100 A H	Anthracite
PN52100 A T	Cor-ten

F - 2700K
5 - 3000K
9 - 4000K

asymmetrical

488 lm (3000K)

173 lm (3000K)

1 power LED
3-step MacAdam, 50000h L90 B10 (Ta 25°C)

head in aluminum, column in stainless steel lens in serigraphed, tempered transparent extra-clear glass

remote power supply required, not included

surface mounted (ground)

non-standard heights available on request

PLIN

POSITIONING DIAGRAMS

PLIN 1.0

A - Diffuse

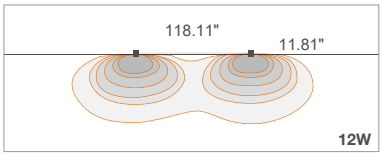

PLIN 1.1

A - Diffuse

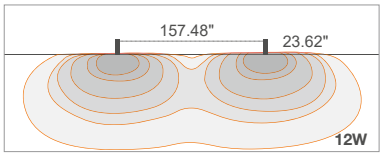

PLIN 1.2

A - Diffuse

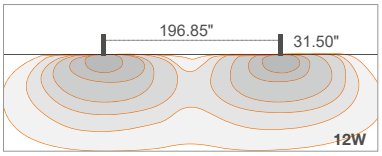

PLIN 2.0

A - Asymmetrical diffuse

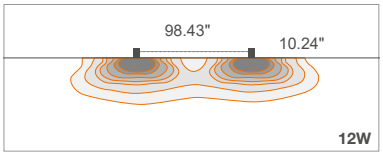

PLIN 2.1

A - Asymmetrical diffuse

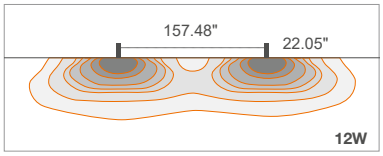

PLIN 2.2

A - Asymmetrical diffuse

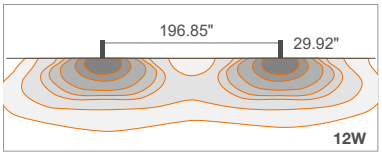

PLIN 4.0

D - Diffuse

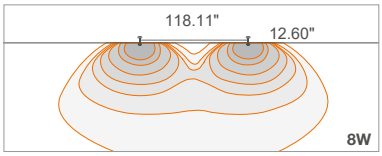

PLIN 4.1

D - Diffuse

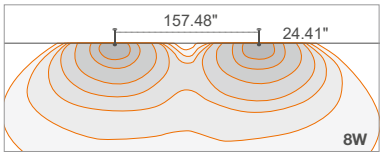

PLIN 4.2

D - Diffuse

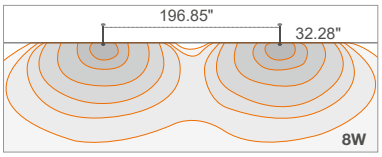

PLIN 5.0

A - Asymmetrical

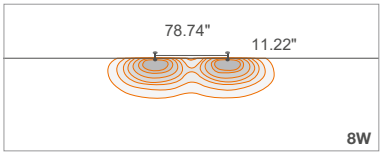

PLIN 5.1

A - Asymmetrical

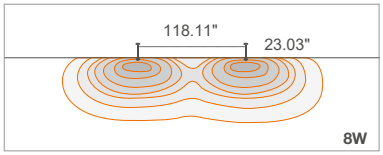

PLIN 5.2

A - Asymmetrical

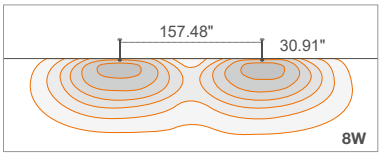

PLIN 4.0
3000K, 8W, anthracite

PLIN

OUTDOOR BOLLARDS

PLIN 1.0

A - Diffuse

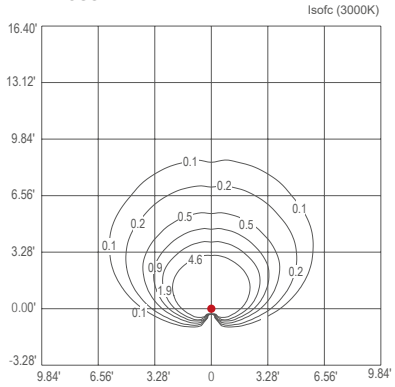

h 11.81" **12W**

PLIN 1.1

A - Diffuse

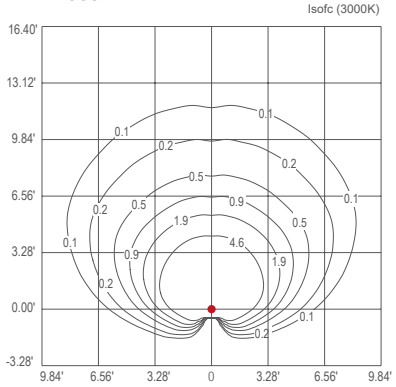

h 23.62" **12W**

PLIN 1.2

A - Diffuse

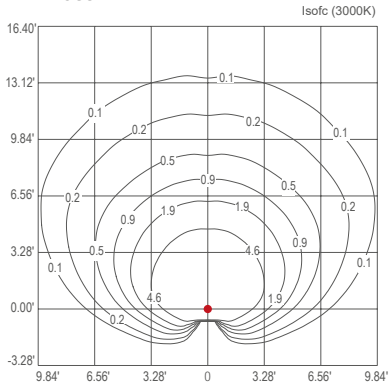

h 31.50" **12W**

PLIN 2.0

A - Asymmetrical diffuse

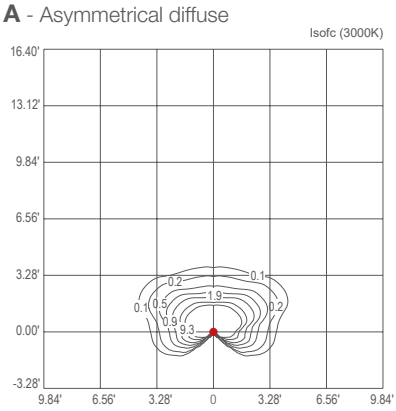

h 10.24" **12W**

PLIN 2.1

A - Asymmetrical diffuse

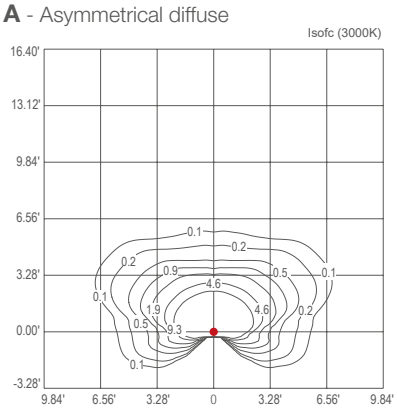

h 22.05" **12W**

PLIN 2.2

A - Asymmetrical diffuse

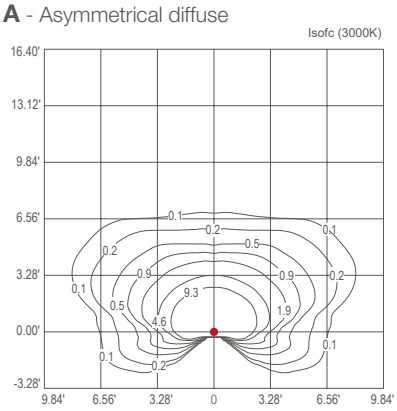

h 29.92" **12W**

PLIN 3.0

A - Asymmetrical diffuse

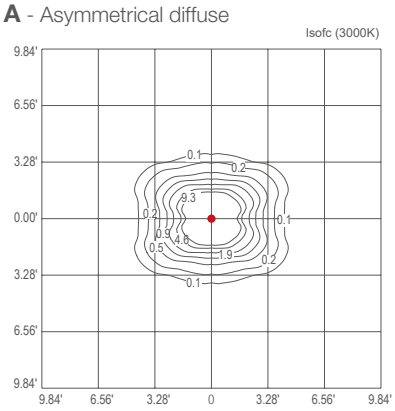

h 10.24" **12W**

PLIN 3.1

A - Asymmetrical diffuse

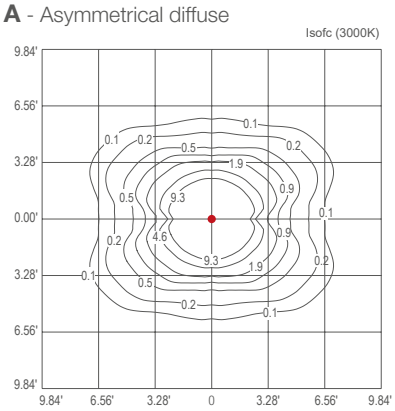

h 22.05" **12W**

PLIN 3.2

A - Asymmetrical diffuse

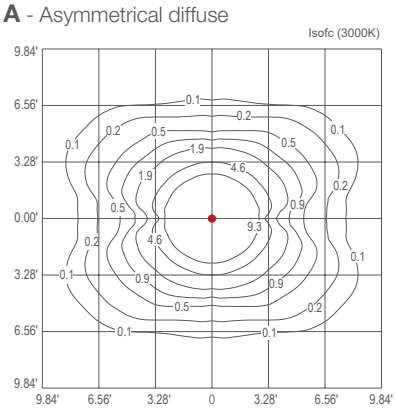

h 29.92" **12W**

PLIN 4.0

D - Diffuse

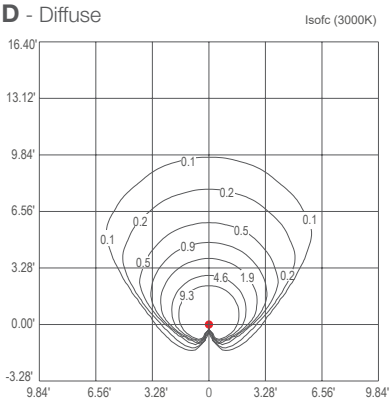

h 12.60" **8W**

PLIN 4.1

D - Diffuse

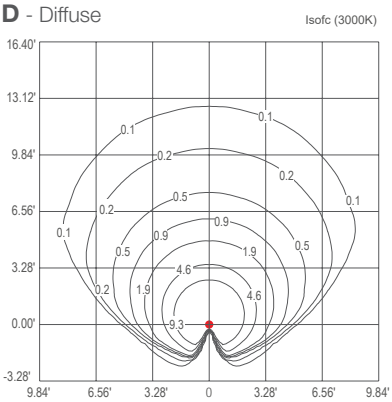

h 24.41" **8W**

PLIN 4.2

D - Diffuse

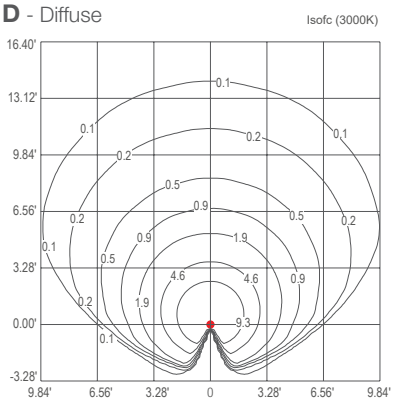

h 32.28" **8W**

PLIN 5.0

A - Asymmetrical

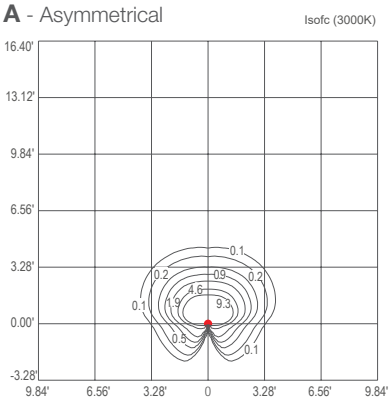

h 11.22" **8W**

PLIN 5.1

A - Asymmetrical

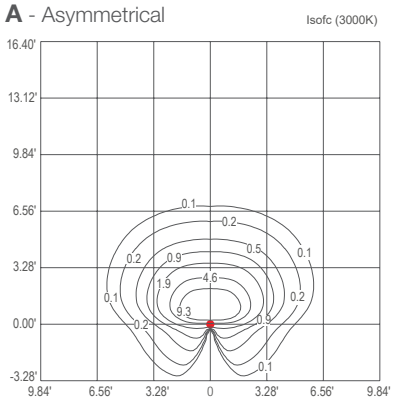

h 23.03" **8W**

PLIN 5.2

A - Asymmetrical

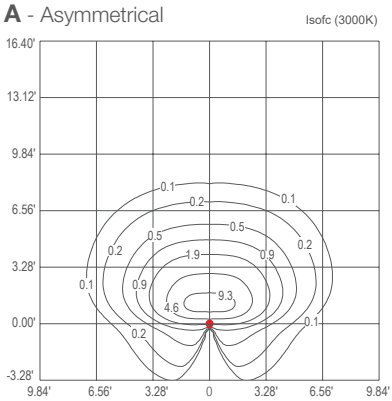

h 30.91" **8W**