designplan™

79 Trenton Avenue
Frenchtown, NJ 08825

www.designplan.com

Tel: (908) 996-7710
Fax: (908) 996-7042

SPOT 3.0 316L
3000K, 12W, 40°

Light planning by / Ing. Paolo Saracino and
Ing. Donato Saracino
Grotta Zinzulusa, Castro Marina, Lecce, Italy

SPOT 316L

OUTDOOR AND UNDERWATER PROJECTORS
FOUNTAINS AND HARSH ENVIRONMENTS

2700K 3000K 4000K 5000K blue

	COVER Ø1.18"	COVER Ø2.72"	COVER Ø4.88"
CONSTANT CURRENT	**SPOT 1.0 316L** 2W 500mA	**SPOT 2.0 316L** 6W 500mA RGB	
CONSTANT VOLTAGE	**SPOT 1.6 316L** 2W 24VDC	**SPOT 2.6 316L** 6W 24VDC	
WHITE AND BLUE LIGHT: CONSTANT VOLTAGE **RGB LIGHT: CONSTANT CURRENT**			**SPOT 3.0 316L** 12W/18W 24V**DC** RGB: 18W 500mA RGB

SPOT 1 316L

SPOT 1.0 316L

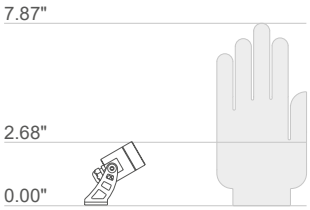

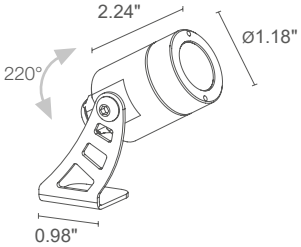

1.06 lbs IP68 IK10

IPS

POWER / POWER SUPPLY **MODEL NO.**	**2W 500mA** **PW1012 ■ ■ A I**
■ **LED COLOR**	**F** - 2700K **5** - 3000K **9** - 4000K **0** - 5000K **1** - blue
■ **OPTICS**	**S** - 10° **M** - 20° **L** - 40°
LUMEN OUTPUT AT SOURCE	145 lm (3000K, 500mA)
DELIVERED LUMEN OUTPUT	88 lm (3000K, 500mA, 20°)
NO. AND TYPE OF LED	1 power LED 1/4 ANSI BIN (white LED color) 50,000h L90 B10 (Ta 25°C)
MATERIAL	body and trim in AISI 316L stainless steel lens in tempered, transparent glass
POWER SUPPLY UNIT	remote power supply required, not included
POWER CABLES	includes 16.40' neoprene cable H05RN-F 2x0.01"/0.03" Ø0.25"
WIRING	**series**
MOUNTING	surface mounted (ceiling, wall, ground, spike) max depth 32.81'
NOTES	suitable for use out of water version with elliptical optics available on request

SPOT 1.6 316L

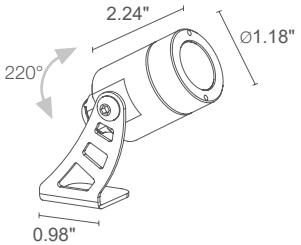

1.06 lbs IP68 IK10

IPS

	2W 24VDC **PW1600 ■ ■ I**
■	**F** - 2700K **5** - 3000K **9** - 4000K **0** - 5000K **1** - blue
■	**S** - 10° **M** - 20° **L** - 40°
	145 lm (3000K)
	88 lm (3000K, 20°)
	1 power LED 1/4 ANSI BIN (white LED color) 50,000h L90 B10 (Ta 25°C)
	body and trim in AISI 316L stainless steel lens in tempered, transparent glass
	remote power supply required, not included
	includes 5 m neoprene cable H05RN-F 2x0.01"/0.03" Ø0.25"
	parallel
	surface mounted (ceiling, wall, ground, spike) max depth 32.81'
	suitable for use out of water version with elliptical optics available on request

SPOT 2 316L

SPOT 2.0 316L

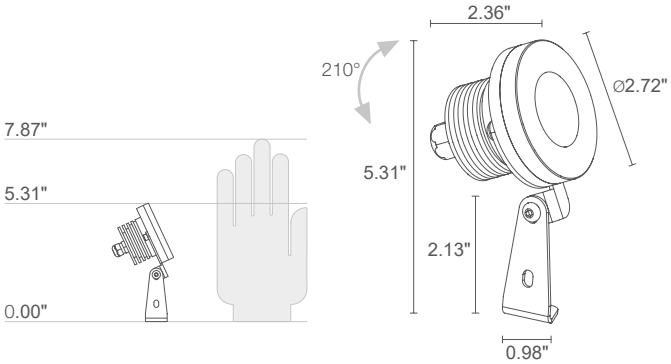

2.20 lbs IP68 IK10

IPS

SPOT 2.6 316L

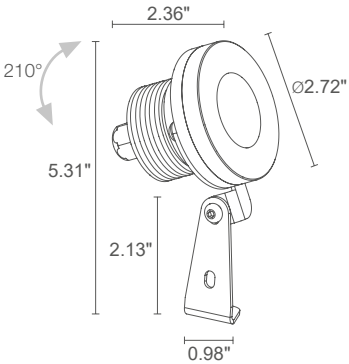

2.20 lbs IP68 IK10

IPS

POWER / POWER SUPPLY **MODEL NO.**	**6W 500mA** **PW2032 ■ ■ A I**	**6W 24VDC** **PW2600 ■ ■ I**
■ **LED COLOR**	**F** - 2700K **5** - 3000K **9** - 4000K **0** - 5000K **1** - blue **6** - RGB	■ **F** - 2700K **5** - 3000K **9** - 4000K **0** - 5000K **1** - blue
■ **OPTICS**	**S** - 10° **M** - 24° **L** - 38°	■ **S** - 10° **M** - 24° **L** - 38°
LUMEN OUTPUT AT SOURCE	436 lm (3000K, 500mA) RGB 277 lm: (R) 102 lm, (G) 132 lm, (B) 43 lm (500mA)	436 lm (3000K)
DELIVERED LUMEN OUTPUT	314 lm (3000K, 500mA, 24°) RGB: 198 lm: (R) 73 lm, (G) 94 lm, (B) 31 lm (500mA, 24°)	314 lm (3000K, 24°)
NO. AND TYPE OF LED	3 power LEDs 1/4 ANSI BIN (white LED color) 50,000h L90 B10 (Ta 25°C)	3 power LED 1/4 ANSI BIN (white LED color) 50,000h L90 B10 (Ta 25°C)
MATERIAL	body and trim in AISI 316L stainless steel lens in tempered, transparent extra-clear glass	body and trim in AISI 316L stainless steel lens in tempered, transparent extra-clear glass
POWER SUPPLY UNIT	remote power supply required, not included	remote power supply required, not included
POWER CABLES	includes 16.40' neoprene cable H05RN-F 2x0.03"/0.03" Ø0.25" RGB: includes 16.40' FEP+RUB cable (equivalent to H05RN-F) 6x0.02"/0.02" Ø0.25"	includes 16.40' neoprene cable H05RN-F 2x0.03"/0.03" Ø0.25"
WIRING	**series**	**parallel**
MOUNTING	surface mounted (ceiling, wall, ground, spike) max depth 32.81'	surface mounted (ceiling, wall, ground, spike) max depth 32.81'
NOTES	suitable for use out of water version with elliptical optics available on request	suitable for use out of water version with elliptical optics available on request

SPOT 3.0 316L

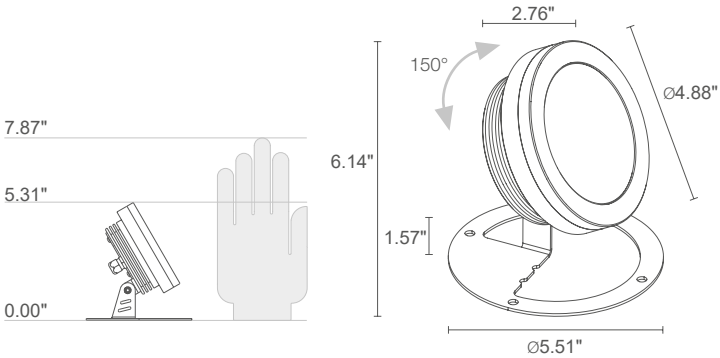

kg 3.05 IP68 IK09

IPS

POWER / POWER SUPPLY MODEL NO.	12W 24VDC blue/white light **PW3062 A I** 18W 24VDC blue/white light **PW3092 A I** 18W 500mA RGB light **PW3092 6 A I**
LED COLOR	**F** - 2700K **5** - 3000K **9** - 4000K **0** - 5000K **1** - blue
OPTICS	**S** - 10° **M** - 20° **L** - 40°
LUMEN OUTPUT AT SOURCE	872 lm (3000K, 12W) 1308 lm (3000K, 18W) RGB 791 lm: (R) 291 lm, (G) 375 lm, (B) 125 lm (500mA)
DELIVERED LUMEN OUTPUT	596 lm (3000K, 20°, 12W) 893 lm (3000K, 20°, 18W) RGB 565 lm: (R) 208 lm, (G) 268 lm, (B) 89 lm (500mA, 20°)
NO. AND TYPE OF LED	6, 9 power LEDs, 1/4 ANSI BIN (white LED color) RGB: 9 power LEDs 50,000h L90 B10 (Ta 25°C)
MATERIAL	body and trim in AISI 316L stainless steel lens in tempered, transparent extra-clear glass
POWER SUPPLY UNIT	remote power supply required, not included
POWER CABLES	includes 16.40' neoprene cable H05RN-F 2x0.03"/0.03" Ø0.25" RGB: includes 16.40' FEP+RUB cable (equivalent to H05RN-F) 6x0.02"/0.02" Ø0.25"
WIRING	parallel RGB: series
MOUNTING	surface mounted (ceiling, wall, ground) max depth 32.81'
NOTES	suitable for use out of water version with elliptical optics available on request

SPOT 3 316L

SPOT 3.0 316L
RGB, 18W

Light planning by / Garofoli
Bari Palese airport, Bari, Italy

SPOT 316L

ACCESSORIES AND POWER SUPPLY UNITS

ACCESSORIES FOR INSTALLATION

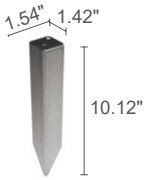

WP0100

Spike for installation in the ground

(Spot 1.0 316L / 1.6 316L / 2.0 316L / 2.6 316L)

POWER CABLES

Neoprene cables
H05RN-F 2x0.01"/0.03" Ø0.25"
IPS

-2 (WF5010) - 32.81'
-3 (WF5015) - 49.21'
-4 (WF5020) - 65.62'
(Spot 1.0 316L)

-2 (WF8410) - 32.81'
-3 (WF8415) - 49.21'
-4 (WF8420) - 65.62'
(Spot 1.6 316L)

Neoprene cables
H05RN-F 2x0.03"/0.03" Ø0.25"
IPS

-2 (WF6010) - 32.81'
-3 (WF6015) - 49.21'
-4 (WF6020) - 65.62'
(Spot 2.0 316L)
white LED color

-2 (WF8610) - 32.81'
-3 (WF8615) - 49.21'
-4 (WF8620) - 65.62'
(Spot 2.6 316L)

-2 (WF6110) - 32.81'
-3 (WF6115) - 49.21'
-4 (WF6120) - 65.62'
(Spot 3.0 316L)
white LED color

FEP+RUB cables
(equivalent to H05RN-F)
6x0.02"/0.02" Ø0.25"
IPS

-2 (WF7310) - 32.81'
-3 (WF7315) - 49.21'
-4 (WF7320) - 65.62'
(Spot 2.0 316L / 3.0 316L)
RGB

to order the power cable, add the suffix -2, -3 or -4
to the code for the lighting device

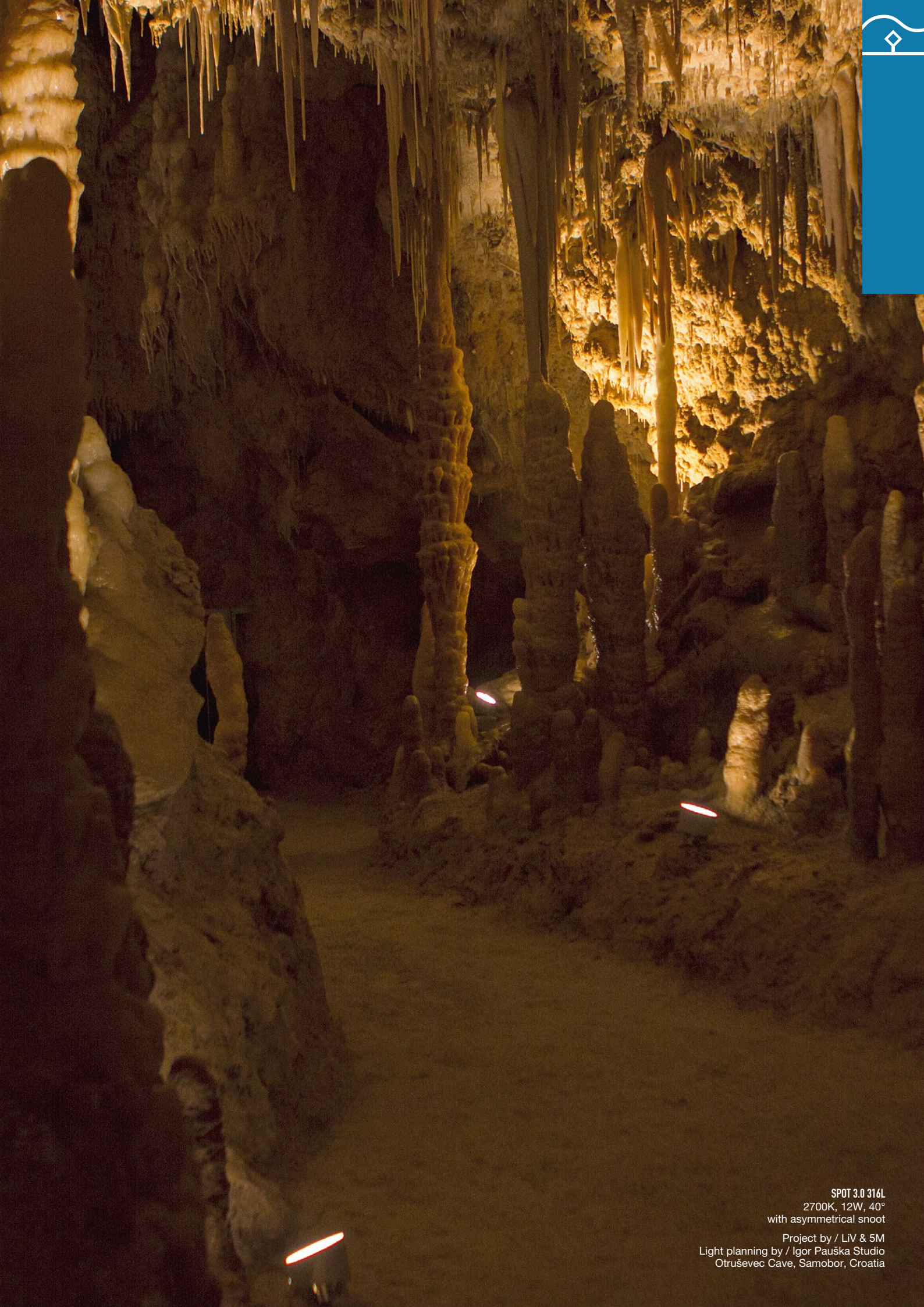

SPOT 3.0 316L
2700K, 12W, 40°
with asymmetrical snoot

Project by / LiV & 5M
Light planning by / Igor Pauška Studio
Otruševec Cave, Samobor, Croatia

SPOT 316L

PHOTOMETRIC DATA

SPOT 1.0 316L
1.6 316L

S - 10°

H (ft)	Ø (ft)	Fc max (3000K)
3.28'	0.56'	202.5
6.56'	1.08'	50.6
9.84'	1.64'	22.5
13.12'	2.17'	12.6
16.40'	2.72'	8.1

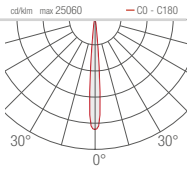

M - 20°

H (ft)	Ø (ft)	Fc max (3000K)
3.28'	1.12'	44.9
6.56'	2.26'	11.2
9.84'	3.38'	5.0
13.12'	4.53'	2.8
16.40'	5.64'	1.8

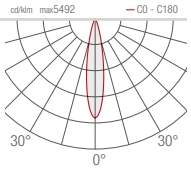

L - 40°

H (ft)	Ø (ft)	Fc max (3000K)
3.28'	2.33'	16.8
6.56'	4.66'	4.2
9.84'	6.99'	1.9
13.12'	9.32'	1.0
16.40'	11.65'	0.7

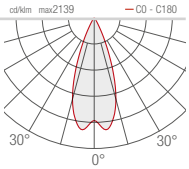

SPOT 2.0 316L
2.6 316L

S - 10°

H (ft)	Ø (ft)	Fc max (3000K)
3.28'	0.59'	495.1
6.56'	1.15'	123.7
9.84'	1.74'	55.0
13.12'	2.30'	30.9
16.40'	2.89'	19.8

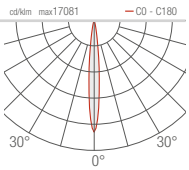

M - 24°

H (ft)	Ø (ft)	Fc max (3000K)
3.28'	1.38'	133.2
6.56'	2.72'	33.4
9.84'	4.10'	14.8
13.12'	5.48'	8.4
16.40'	6.86'	5.3

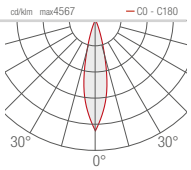

L - 38°

H (ft)	Ø (ft)	Fc max (3000K)
3.28'	2.20'	54.6
6.56'	4.43'	13.7
9.84'	6.63'	6.0
13.12'	8.83'	3.4
16.40'	11.06'	2.2

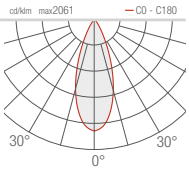

SPOT 3.0 316L

S - 10°

H (ft)	Ø (ft)	Fc max (3000K) 12W	18W
3.28'	0.69'	783.4	1179.7
6.56'	1.38'	195.8	294.9
9.84'	2.10'	87.1	131.1
13.12'	2.79'	49.0	73.8
16.40'	3.48'	31.3	47.2

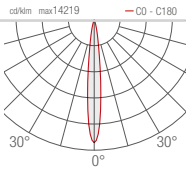

M - 20°

H (ft)	Ø (ft)	Fc max (3000K) 12W	18W
3.28'	1.31'	280.9	420.9
6.56'	2.66'	70.2	105.3
9.84'	3.97'	31.2	46.7
13.12'	5.28'	17.6	26.3
16.40'	6.59'	11.2	16.8

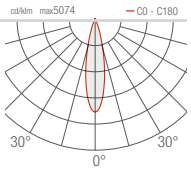

L - 40°
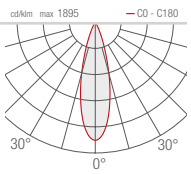
H (ft)	Ø (ft)	Fc max (3000K) 12W	18W
3.28'	1.64'	89.4	151.8
6.56'	3.25'	48.6	37.9
9.84'	4.89'	21.6	16.9
13.12'	6.53'	12.2	9.5
16.40'	8.17'	7.8	6.0