GEM PRO 3

datasheet

Gem Pro is a round, IP67-rated, recessed fixture with frame, suitable for installation in floors or walls, made to ensure durability and maximum resistance against atmospheric agents. Gem Pro 3 is the Ø4.1" aperture version offering 3 static white color temperatures with various optics options.



Fixture Dimensions

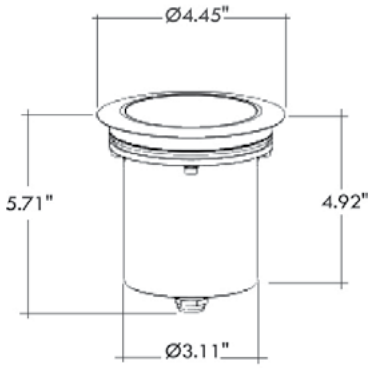

TECHNICAL DATA

Wattage / Input	12.2W (350mA)
Power Supply	Remote, not included. See page 2.
Construction	Body: Anticorodal Aluminum, Stainless Steel Front Ring Nut: AISI 316L Stainless Steel Lens: PMMA (Acrylic) Diffuser: Extra Clear Glass Cable Length: 1.64'
CCT	2700K, 3000K, 4000K
BUG Rating	B0-U4-G0 (3000K, 12°, 25°) B0-U5-G0 (3000K, 40°) B0-U5-G1 (3000K, Wall Washer)
Delivered Lumens	2065 lm (3000K)
Efficacy	169.3 lm/W (3000K)
Optics	8 Standard, See Below
Finishes	3 Standard, See Below
Fixture Dimensions	Ø4.45" x 5.71" h
Aperture	Ø4.13"
Cutout Dimensions	Ø2.87"
Color Consistency	<3-Step MacAdam
IP Rating	IP67
Impact Resistance	IK10
Driveover Capacity	Up to 3307 lbs

ORDERING INFORMATION

Example: LM07.200003.US.16.CC.M3.B5. Accessories / Power Supplies ordered separately.

LM07.200003.US	.		.	CC	.		.	

Model No.	Finish	Technology	Optic	CCT
LM07.200003.US	**16** - 316 Stainless Steel **59** - Bronze Stainless Steel	**CC** - Remote Constant Current (see page 2)	**S4** - 12° Spot **M2** - 25° Medium **M3** - 30° Medium **F2** - 45° Flood **F4** - 60° Flood **W1** - Wall Washer 1 **H1** - Horizontal Elliptic 1 40°x12° **H2** - Horizontal Elliptic 2 50°x12° **S2** - 6° Spot - *On Request*	**B2** - 2700K **B3** - 3000K **B5** - 4000K

Job Name/Date:

Fixture Type Designation:

sales@designplan.com
www.designplan.com

79 Trenton Avenue, Frenchtown NJ 08825

© Copyright 2022 Designplan Lighting, Inc.

Published: November 20, 2026

P: 908-996-7710
F: 908-996-7042

SUGGESTED POWER SUPPLIES

350mA

Part Number	Description	Input/Output	# of Fixtures
PPLT00495	Phase Dim (120V only)	120VAC to 350mA, 25W, Class 2, IP66	1-2
PPLT00263	Leading/Trailing Edge Dimming to 10% (120V only)	120-277VAC to 350mA, 32W, Class 2	1-1
PPLT00467-P	0-10V Dimming to 1.0%	120-277VAC to 350mA, 50W, Class 2, DAMP	1-1
PPLT00561-P	0-10V Dimming to 0.1%	120-277VAC to 350mA, 100W, Class 2	1-1

Suggested Lutron Compatible

Part Number	Option	Lutron SKU	Dim Range	Description	Input/Output	# of Fixtures
PPLT00516	L3DAE / L3DA3W	L3DA	100%-1%	Hi-Lume™ 1% EcoSystem™ OR 1% 3-Wire LED Driver	120-277VAC to 350mA, 13W, Class 2	1-1
PPLT00179	L3DAE / L3DA3W	L3DA	100%-1%	Hi-Lume™ 1% EcoSystem™ OR 1% 3-Wire LED Driver	120-277VAC to 350mA, 19W, Class 2	1-1

For other power supply options consult factory.

ACCESSORIES - Installation



LM20.104130

Outer Casing IP20

Sizes Ø4.33" x 6.30" h

Hole Ø2.87"

Job Name/Date:

Fixture Type Designation:

sales@designplan.com

www.designplan.com

79 Trenton Avenue, Frenchtown NJ 08825

© Copyright 2022 Designplan Lighting, Inc.

Published: November 20, 2026

P: 908-996-7710

F: 908-996-7042

PHOTOMETRIC DATA

Note: All photometric data is 3000K

Maximum Candela = 8192

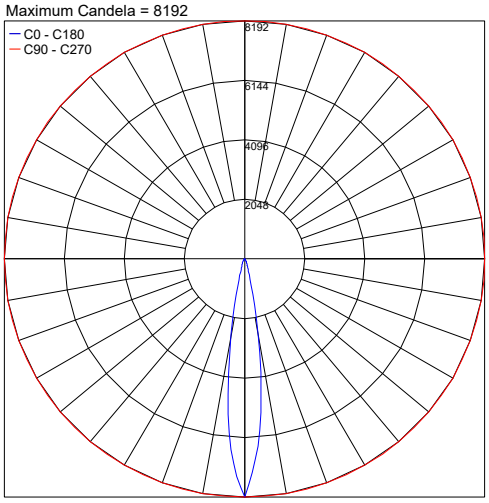

PHOTOMETRIC FILENAME : GEM PRO 3 07.104032.XX.SP.BP.IES

Maximum Candela = 4365

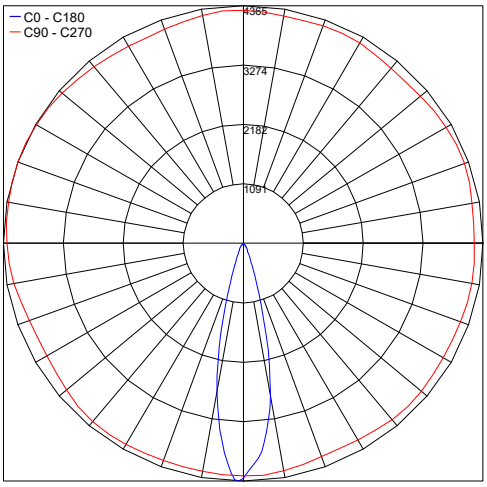

PHOTOMETRIC FILENAME : GEM PRO 3 07.104032.XX.MD.BP.IES

Maximum Candela = 2063.5

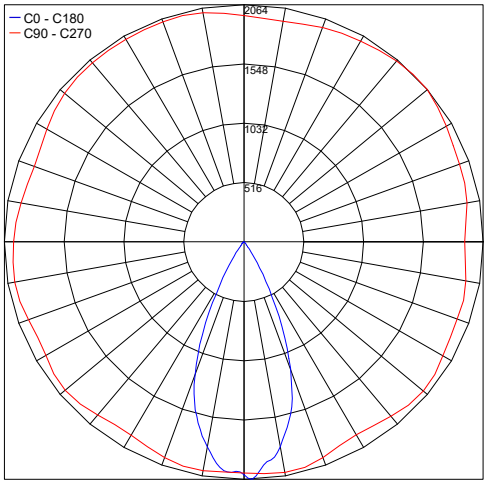

PHOTOMETRIC FILENAME : GEM PRO 3 07.104032.XX.FL.BP.IES

Maximum Candela = 1452.3

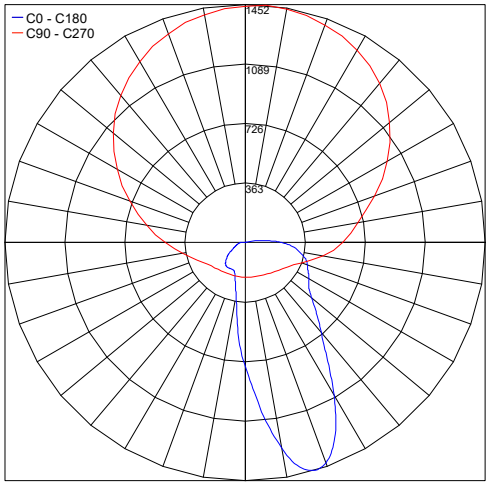

PHOTOMETRIC FILENAME : GEM PRO 3 07.104032.XX.WW.BP.IES

Job Name/Date:

Fixture Type Designation:

sales@designplan.com
www.designplan.com

79 Trenton Avenue, Frenchtown NJ 08825

© Copyright 2022 Designplan Lighting, Inc.

Published: November 20, 2026

P: 908-996-7710
F: 908-996-7042