ALTOPIANO 1.1

datasheet

Altopiano is a family of compact, recessed outdoor downlights available in 3 sizes, round or square, suitable for hospitality and residential sectors, as well as steam rooms, natatoriums (up to 5ppm of chlorine) and open structures, NOT saunas.. Available in static white, RGBW mixing or Dim to Warm. Altopiano 1.1 is the 3.9" square, static white version. UGR < 19 for 19°, 25° and 37° optics.



Fixture Dimensions

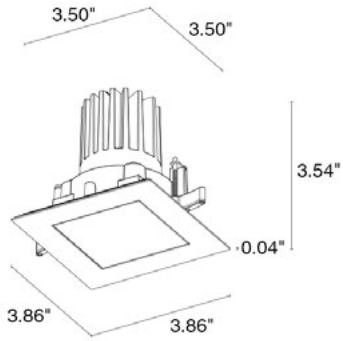

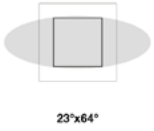

TECHNICAL DATA

Wattage / Input	8W (350mA - General Use / 200mA - Steam Rooms)
Power Supply	Remote, not included. See page 2.
Construction	Body: Thermally Conductive Technopolymer Trim: Stainless Steel Lens: Diffuse or Extra-clear Glass Cable Length: 1.64' standard
Ceiling Thickness	Works with ceilings 1/8" to 3/4" thick For ceilings 3/64" to 1 3/8" thick, use spring clips
CCT	2200K, 2700K, 3000K, 4000K
CRI	80, >90 (2200K only available >90)
Delivered Lumens	498 lm (3000K, 25°, CRI >90, 350mA) 588 lm (3000K, 25°, CRI 80, 350mA)
Efficacy	62.3 lm/W (3000K, 25°, CRI >90) 73.5 lm/W (3000K, 25°, CRI 80)
Optics	6 Standard (see below)
Finishes	5 Standard, Custom RAL on request *(4 Stage Marine Grade Finish)*
Fixture Dimensions	3.86" x 3.86" x 3.54" h
Cut-out Size	3.54" x 3.54"
Fixture Weight	1.32 lbs
UGR	< 19 for 19°, 25° and 37° optics
Lumen Maintenance	60,000 hrs L90, B10 (Ta 25°C)
Color Consistency	2-Step MacAdam
Operating Temp.	-4°F to +113°F
IP Rating	IP66
IK Rating	IK10

ORDERING INFORMATION

Example: AP1110100150KF. Accessories / Power Supplies ordered separately.

AP1110		**0**					-	

Model #	CRI	Power	Accessories	CCT	Optics	Finish	
AP1110	**0** - CRI 80 (not available on 2200K) **1** - CRI>90	**0** - See Drivers on page 2	**00** - None **01** - Honeycomb **02** - Anti-Glare **NOTE:** *Honeycomb Louvre and Anti-glare Shield not available on 0D (Diffuse) or 0W (23°x64°)*	**N** - 2200K *(CRI>90 only)* **F** - 2700K **5** - 3000K **9** - 4000K	**0S** - 19° **0M** - 25° **0L** - 37° **0K** - 50° **0W** - 23° x 64° **0D** - Diffuse	**H** - Anthracite **T** - Cor-ten **F** - Gray **E** - White **7** - Primer **C** - Custom RAL *(consult factory for "C")*	**.ST** **.NAT** ***NOTE:** Add suffix if fixture is going to used in steam room or natatorium (up to 5ppm chlorine). NOT for use in saunas.*

Job Name/Date:

Fixture Type Designation:

sales@designplan.com
www.designplan.com

79 Trenton Avenue, Frenchtown NJ 08825

© Copyright 2023 Designplan Lighting, Inc.

Published: November 17, 2026

P: 908-996-7710
F: 908-996-7042

BELOW DRIVERS for GENERAL USE, NATATORIUM OR JA8 *(Not Suitable for Steam Rooms)*

SUGGESTED POWER SUPPLIES - 350mA - JA8 Compatible *(Also for General Use)*

Part Number	Description	Input/Output	# of Fixtures
PPLT00466-P	0-10V Dimming to 1.0%	120-277VAC to 350mA, 10W, Class 2, DAMP	1-1

SUGGESTED POWER SUPPLIES - 350mA - FOR GENERAL USE / NATATORIUM *(Not Steam Rooms or JA8 Compatible)*

Part Number	Description	Input/Output	# of Fixtures
PPLT00211	Non-Dim	120VAC to 350mA, 10W, Class 2	1-1
PPLT00496	Phase Dim (120V only)	120VAC to 350mA, 12W, Class 2, DAMP	1-1
PPLT00263	Leading / Trailing Edge Dimmable to 10% (120V only)	120-277VAC to 350mA, 32W, Class 2	2-2
PPLT00467-P	0-10V Dimming to 1.0%	120-277VAC to 350mA, 50W, Class 2, DAMP	1-3
PPLT00561-P	0-10V Dimming to 0.1% (4 channels)	120-277VAC to 350mA, 100W, Class 2	1-3

For other power supply options consult factory.

BELOW DRIVERS ONLY FOR STEAM ROOM VERSIONS

SUGGESTED POWER SUPPLIES - 200mA - FOR STEAM ROOMS ONLY *(Not JA8 Compatible)*

Part Number	Description	Input/Output	# of Fixtures
PPLT00466-P	0-10V Dimming to 1.0%	120-277VAC to 200mA, 10W, Class 2, DAMP	1-1
PPLT00467-P	0-10V Dimming to 1.0%	120-277VAC to 200mA, 50W, Class 2, DAMP	1-3
PPLT00561-P	0-10V Dimming to 0.1% (4 channels)	120-277VAC to 200mA, 100W, Class 2	1-3

For other power supply options consult factory.

Job Name/Date:

Fixture Type Designation:

© Copyright 2023 Designplan Lighting, Inc.

ACCESSORIES

Installation

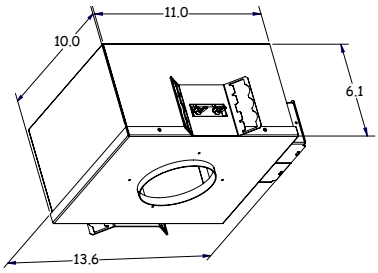

WCA22-DP
IC / JA8 Housing



WGA02
Retaining Spring Clip
Use for ceilings 3/64” min. to 1 3/8” max. thick



WCA22
Housing for Concrete Ceilings

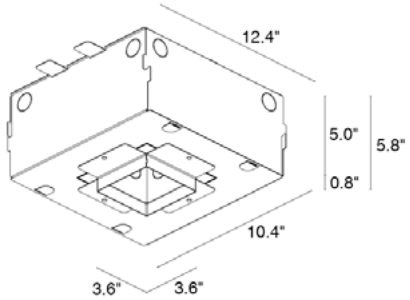

Anti-Glare

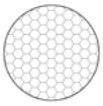

Honeycomb Louvre
Built into the fixture
The honeycomb louvre can be provided on all fixed optics except for diffuse and elliptical optics



Anti-glare Shield
Built into the fixture
The anti-glare shield can be provided on all fixed optics except for diffuse and elliptical optics

Various



WNAP10A0
Anti-Fall Kit

PHOTOMETRIC DATA

See IES Files

Job Name/Date:

Fixture Type Designation:

sales@designplan.com
www.designplan.com

79 Trenton Avenue, Frenchtown NJ 08825

© Copyright 2023 Designplan Lighting, Inc.

Published: November 17, 2026

P: 908-996-7710
F: 908-996-7042