ALTOPIANO 1.2

datasheet

Altopiano is a family of compact, recessed outdoor downlights available in 3 sizes, round or square, suitable for hospitality and residential sectors, as well as steam rooms and open structures, NOT saunas. Available in static white, RGBW mixing or Dim to Warm. Altopiano 1.2 is the 3.9” round, RGBW version. Requires a PWM controller provided by others.



TECHNICAL DATA

Wattage / Input	8W (24VDC)
Power Supply	Remote, not included. See page 2.
Construction	Body: Thermally Conductive Technopolymer Trim: Stainless Steel Lens: Diffuse or Extra-clear Glass Cable Length: 1.64’ standard
Ceiling Thickness	Works with ceilings 1/8” to 3/4” thick For ceilings 3/64” to 1 3/8” thick, use spring clips
CCT	RGBW
CRI	—
Delivered Lumens	310 lm: (R) 48 lm, (G) 117 lm, (B) 16 lm, (W) 129 lm (3000K, 24°)
Efficacy	38.8 lm/W (3000K, 24°)
Optics	6 Standard (see below)
Finishes	5 Standard, Custom RAL on request *(4 Stage Marine Grade Finish)*
Fixture Dimensions	Ø3.86” x 3.54” h
Cut-out Size	Ø3.54”
Fixture Weight	1.32 lbs
LED Source	1 High Intensity Power LED
Lumen Maintenance	60,000 hrs L90, B10 (Ta 25°C)
Operating Temp.	-4°F to +113°F
IP Rating	IP66
IK Rating	IK08

Fixture Dimensions

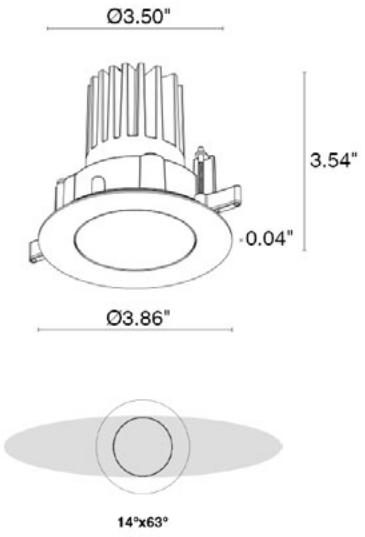

ORDERING INFORMATION

Example: AP1200000170LF. Accessories / Power Supplies ordered separately.

AP1200	00		7		
Model #	**Control System**	**Accessories**	**CCT**	**Optics**	**Finish**
AP1200	**00** - PWM (Controller by others or see page 2 for option)	**00** - None **01** - Honeycomb *Honeycomb Louvre not available on 0D (Diffuse) or 0W (23°x64°)*	**7** - RGBW	**0S** - 14° **0M** - 24° **0L** - 37° **0K** - 44° **0W** - 14° x 63° **0D** - Diffuse	**H** - Anthracite **T** - Cor-ten **F** - Gray **E** - White **7** - Primer **C** - Custom RAL *(consult factory for “C”)*

Job Name/Date:

Fixture Type Designation:

sales@designplan.com
www.designplan.com

79 Trenton Avenue, Frenchtown NJ 08825

© Copyright 2023 Designplan Lighting, Inc.

Published: November 17, 2026

P: 908-996-7710
F: 908-996-7042

ALTOPIANO 1.2

datasheet

SUGGESTED POWER SUPPLIES

24VDC

Part Number	Description	Input/Output	# of Fixtures
PPLT00586	Non-Dim	120-277VAC to 24VDC, 40W, Class 2	1-4
PPLT00158	Non-Dim	120VAC to 24VDC, 100W, Class 2	1-10

For other power supply options consult factory.

ACCESSORIES - Installation



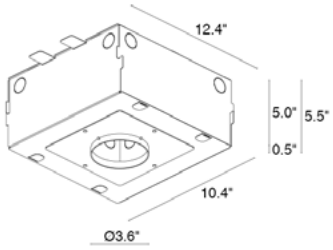

WCA19
Outer Casing
For solid ceilings (concrete)
Consult factory for regular ceilings

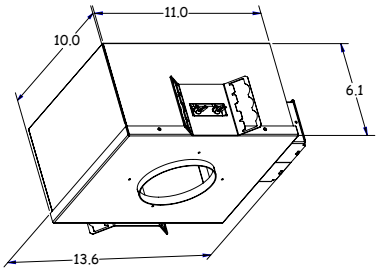

WCA19-DP
IC / JA8 Housing



WGA02
Retaining Spring Clip
Use for ceilings 3/64" min. to 1 3/8" max. thick

ACCESSORIES - Anti-Glare

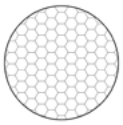

Honeycomb Louvre
Built into the fixture
The honeycomb louvre can be provided on all fixed optics except for diffuse and elliptical optics

Various



WNAP10A0
Anti-Fall Kit

ACCESSORIES

Controllers (RGBW)

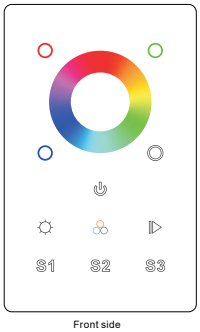

Front side

PPWD00588
RGBW PWM Controller Option
Touch Sensitive Color Wheel
4 channels PWM Signal Output
10 Built-In Effects
Controls 3 zones synchronously and separately

PHOTOMETRIC DATA

See IES Files

Job Name/Date:

Fixture Type Designation:

sales@designplan.com
www.designplan.com

79 Trenton Avenue, Frenchtown NJ 08825

© Copyright 2023 Designplan Lighting, Inc.

Published: November 17, 2026

P: 908-996-7710
F: 908-996-7042