# ALTOPIANO 1.3

datasheet

Altopiano is a family of compact, recessed outdoor downlights available in 3 sizes, round or square, suitable for hospitality and residential sectors, as well as steam rooms and open structures, NOT saunas. Available in static white, RGBW mixing or Dim to Warm. Altopiano 1.3 is the 3.9" square, RGBW version. Requires a PWM controller by others.



## TECHNICAL DATA

| | |
|---|---|
| **Wattage / Input** | 8W (24VDC) |
| **Power Supply** | Remote, not included. See page 2. |
| **Construction** | Body: Thermally Conductive Technopolymer<br>Trim: Stainless Steel<br>Lens: Diffuse or Extra-clear Glass<br>Cable Length: 1.64' standard |
| **Ceiling Thickness** | Works with ceilings 1/8" to 3/4" thick<br>For ceilings 3/64" to 1 3/8" thick, use spring clips |
| **CCT** | RGBW |
| **CRI** | — |
| **Delivered Lumens** | 310 lm: (R) 48 lm, (G) 117 lm, (B) 16 lm,<br>(W) 129 lm (3000K, 24°) |
| **Efficacy** | 38.8 lm/W (3000K, 24°) |
| **Optics** | 6 Standard (see below) |
| **Finishes** | 5 Standard, Custom RAL on request<br>*(4 Stage Marine Grade Finish)* |
| **Fixture Dimensions** | 3.86" x 3.86" x 3.54" h |
| **Cut-out Size** | 3.54" x 3.54" |
| **Fixture Weight** | 1.32 lbs |
| **LED Source** | 1 High Intensity Power LED |
| **Lumen Maintenance** | 60,000 hrs L90, B10 (Ta 25°C) |
| **Operating Temp.** | -4°F to +113°F |
| **IP Rating** | IP66 |
| **IK Rating** | IK07 |

Fixture Dimensions

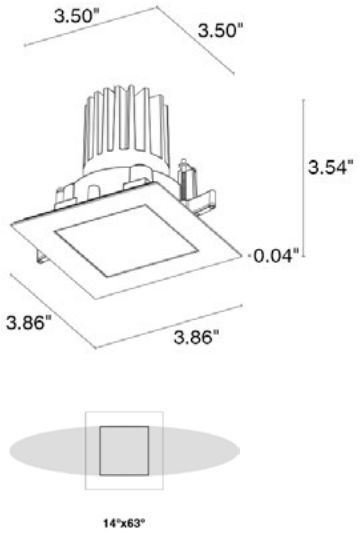


## ORDERING INFORMATION

***Example: AP1300100150KF. Accessories / Power Supplies ordered separately.***

| AP1300 | 00 | | 7 | | |
|---|---|---|---|---|---|
| **Model #** | **Control System** | **Accessories** | **CCT** | **Optics** | **Finish** |
| **AP1300** | **00** - PWM<br>(Controller by others or see page 2 for option) | **00** - None<br>**01** - Honeycomb<br>*Honeycomb Louvre not available on 0D (Diffuse) or 0W (23°x64°)* | **7** - RGBW | **0S** - 14°<br>**0M** - 24°<br>**0L** - 37°<br>**0K** - 44°<br>**0W** - 14° x 63°<br>**0D** - Diffuse | **H** - Anthracite<br>**T** - Cor-ten<br>**F** - Gray<br>**E** - White<br>**7** - Primer<br>**C** - Custom RAL<br>*(consult factory for "C")* |

*Job Name/Date:*

*Fixture Type Designation:*

**sales@designplan.com**
www.designplan.com

**79 Trenton Avenue, Frenchtown NJ 08825**
© Copyright 2023 Designplan Lighting, Inc.
Published: November 17, 2026
**P: 908-996-7710**
**F: 908-996-7042**

## SUGGESTED POWER SUPPLIES

24VDC

| Part Number | Description | Input/Output | # of Fixtures |
|---|---|---|---|
| PPLT00586 | Non-Dim | 120-277VAC to 24VDC, 40W, Class 2 | 1-4 |
| PPLT00158 | Non-Dim | 120VAC to 24VDC, 100W, Class 2 | 1-10 |

*For other power supply options consult factory.*

## ACCESSORIES - Installation



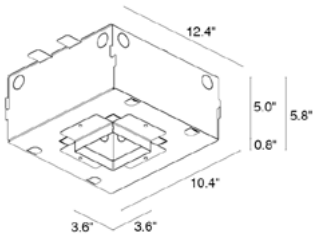


**WCA22**
Outer Casing
*For solid ceilings (concrete)*
*Consult factory for regular ceilings*



**WGA02**
Retaining Spring Clip
Use for ceilings 3/64" min. to 1 3/8" max. thick

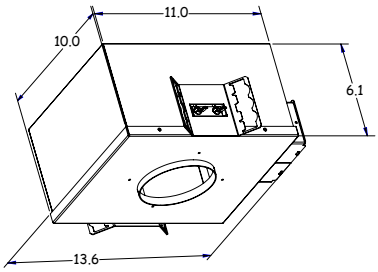


**WCA22-DP**
IC / JA8 Housing

## ACCESSORIES - Anti-Glare

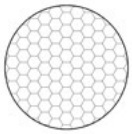

**Honeycomb Louvre**
Built into the fixture
*The honeycomb louvre can be provided on all fixed optics except for diffuse and elliptical optics*

### Various



**WNAP10A0**
Anti-Fall Kit

## ACCESSORIES

*Controllers (RGBW)*

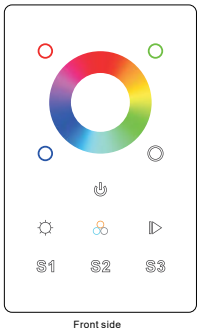

Front side

PPWD00588
**RGBW PWM Controller Option**
*Touch Sensitive Color Wheel*
*4 channels PWM Signal Output*
*10 Built-In Effects*
*Controls 3 zones synchronously and separately*

## PHOTOMETRIC DATA

*See IES Files*

*Job Name/Date:*

*Fixture Type Designation:*



© Copyright 2023 Designplan Lighting, Inc.