ALTOPIANO 1.7

designplan

datasheet

Altopiano is a family of compact, recessed outdoor downlights available in 3 sizes, round or square, perfectly suitable for hospitality and residential sectors, as well as steam rooms and natatoriums (up to 5ppm of chlorine), NOT saunas. Available in static white, as well as RGBW mixing and Dim to Warm. Altopiano 1.7 is the 3.9” square, Dim to Warm version.

TECHNICAL DATA

Wattage / Input	9W (350mA - General Use / 200mA - Steam Rooms)
Power Supply	Remote, not included. See page 2.
Construction	Body: Thermally Conductive Technopolymer Trim: Stainless Steel Lens: Diffuse or Extra-clear Glass Cable Length: 1.64’ standard
Ceiling Thickness	Works with ceilings 1/8” to 3/4” thick. For ceilings 3/64” to 1 3/8” thick, use spring clips.
CCT	Dim to Warm (1800-3000K)
CRI	>90
Delivered Lumens	372 lm (3000K, 27°, 350mA)
Efficacy	41.3 lm/W (3000K, 27°)
Optics	6 Standard (see below)
Finishes	5 Standard, Custom RAL on request (4 Stage Marine Grade Finish)
Fixture Dimensions	3.86” x 3.86” x 3.54” h
Cut-out Size	3.54” x 3.54”
Fixture Weight	1.32 lbs
LED Source	1 COB LED
Lumen Maintenance	55,000 hrs L90, B10 (Ta 25°C)
Color Consistency	3-Step MacAdam
Operating Temp.	-4°F to +113°F
IP Rating	IP66
IK Rating	IK07

Fixture Dimensions

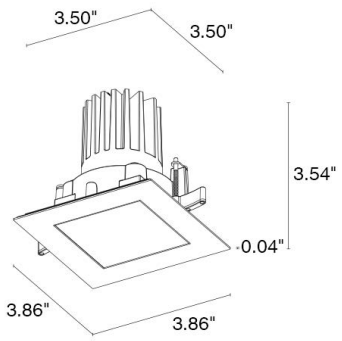

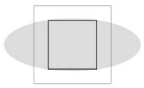

25°x65°

ORDERING INFORMATION

Example: AP17101001W0KF or AP17101001W0KF-ST. Accessories / Power Supplies ordered separately.

AP1710	10		W			-	
Model #	**Power**	**Accessories**	**CCT**	**Optics**	**Finish**		
AP1710	**10** - Remote	**00** - None **01** - Honeycomb **02** - Anti-Glare Shield **NOTE:** *Honeycomb Louvre and Anti-Glare Shield not available on 0D (Diffuse) or 0W (23°x64°)*	**W** - Dim to Warm *(1800-3000K)*	**0S** - 22° **0M** - 26° **0L** - 37° **0K** - 51° **0W** - 22° x 65° **0D** - Diffuse	**H** - Anthracite **T** - Cor-ten **F** - Gray **E** - White **7** - Primer **C** - Custom RAL *(consult factory for “C”)*		**.ST** **.NAT** ***NOTE:*** *Add suffix if fixture is going to used in steam room or natatorium (up to 5ppm chlorine). NOT for use in saunas.*

Job Name/Date:

Fixture Type Designation:

sales@designplan.com
www.designplan.com

79 Trenton Avenue, Frenchtown NJ 08825

P: 908-996-7710
F: 908-996-7042

© Copyright 2023 Designplan Lighting, Inc.

Published: June 19, 2026

BELOW DRIVERS for GENERAL USE, NATATORIUM OR JA8 *(Not Suitable for Steam Rooms)*

SUGGESTED POWER SUPPLIES - 350mA - JA8 Compatible *(Also for General Use)*

Part Number	Description	Input/Output	# of Fixtures
PPLT00466-P	0-10V Dimming to 1.0%	120-277VAC to 350mA, 10W, Class 2, DAMP	1-1

SUGGESTED POWER SUPPLIES - 350mA - FOR GENERAL USE / NATATORIUM *(Not Steam Rooms or JA8 Compatible)*

Part Number	Description	Input/Output	# of Fixtures
PPLT00496	Phase Dim (120V only)	120VAC to 350mA, 12W, Class 2, DAMP	1-1
PPLT00263	Leading / Trailing Edge Dimmable to 10% (120V only)	120-277VAC to 350mA, 32W, Class 2	2-2
PPLT00467-P	0-10V Dimming to 1.0%	120-277VAC to 350mA, 50W, Class 2, DAMP	1-3
PPLT00561-P	0-10V Dimming to 0.1%	120-277VAC to 350mA, 100W, Class 2	1-3

For other power supply options consult factory.

BELOW DRIVERS ONLY FOR STEAM ROOM VERSIONS

SUGGESTED POWER SUPPLIES - 200mA - FOR STEAM ROOMS ONLY *(Not JA8 Compatible)*

Part Number	Description	Input/Output	# of Fixtures
PPLT00466-P	0-10V Dimming to 1.0%	120-277VAC to 200mA, 10W, Class 2, DAMP	1-1
PPLT00467-P	0-10V Dimming to 1.0%	120-277VAC to 200mA, 50W, Class 2, DAMP	1-3
PPLT00561-P	0-10V Dimming to 0.1%	120-277VAC to 200mA, 100W, Class 2	1-3

For other power supply options consult factory.

Job Name/Date:

Fixture Type Designation:

© Copyright 2023 Designplan Lighting, Inc.
Published: June 19, 2026

ACCESSORIES

Installation

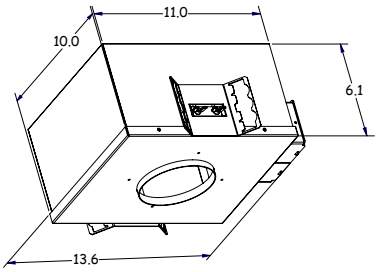

WCA22-DP
IC / JA8 Housing

WGA02
Retaining Spring Clip
Use for ceilings 3/64” min. to 1 3/8” max. thick

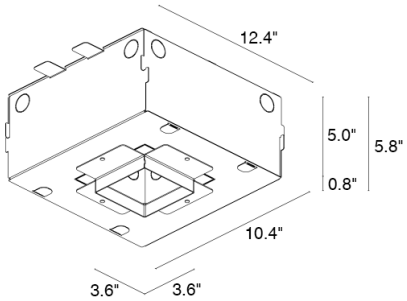

WCA22
Housing for Concrete Ceilings

Anti-Glare

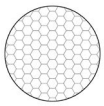

Honeycomb Louvre
Built into the fixture
The honeycomb louvre can be provided on all fixed optics except for diffuse and elliptical optics

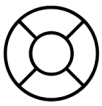

Anti-glare Shield
Built into the fixture
The anti-glare shield can be provided on all fixed optics except for diffuse and elliptical optics

Various

WNAP10A0
Anti-Fall Kit

PHOTOMETRIC DATA

See IES Files

Job Name/Date:

Fixture Type Designation:

sales@designplan.com
www.designplan.com

79 Trenton Avenue, Frenchtown NJ 08825

P: 908-996-7710
F: 908-996-7042

© Copyright 2023 Designplan Lighting, Inc.

Published: June 19, 2026