ALTOPIANO 2.0

datasheet

Altopiano is a family of compact, recessed outdoor downlights available in 3 sizes, round or square, suitable for hospitality and residential sectors, as well as steam rooms, natatoriums (up to 5ppm of chlorine) and open structures, NOT saunas. Available in static white, RGBW mixing or Dim to Warm. Altopiano 2.0 is the 4.7" round, static white version. UGR < 19 for 16°, 26° and 38° optics.



TECHNICAL DATA

Wattage / Input	16W (350mA - Steam Rooms, 500mA - General Use)
Power Supply	Remote, not included. See page 2.
Construction	Body: Thermally Conductive Technopolymer Trim: Stainless Steel Lens: Diffuse or Extra-clear Glass Cable Length: 1.64' standard
Ceiling Thickness	Works with ceilings 1/8" to 3/4" thick. For ceilings 3/64" to 1 3/8" thick, use spring clips.
CCT	2200K, 2700K, 3000K, 4000K
CRI	80, >90 (2200K only available >90)
Delivered Lumens	1060 lm (3000K, 57°, CRI >90, 500mA) 1251 lm (3000K, 57°, CRI 80, 500mA)
Efficacy	66.3 lm/W (3000K, 57°, CRI >90) 78.2 lm/W (3000K, 57°, CRI 80)
Optics	6 Standard (see below)
Finishes	5 Standard, Custom RAL on request (4 Stage Marine Grade Finish)
Fixture Dimensions	Ø4.72" x 3.54" h
Cut-out Size	Ø4.33"
Fixture Weight	1.54 lbs
UGR	< 19 for 16°, 26° and 38° optics
Lumen Maintenance	60,000 hrs L90, B10 (Ta 25°C)
Color Consistency	2-Step MacAdam
Operating Temp.	-4°F to +113°F
IP Rating	IP66
IK Rating	IK08

Fixture Dimensions

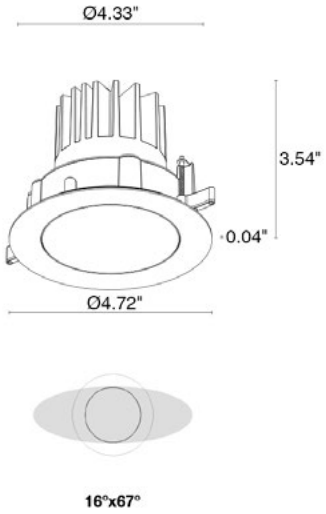

ORDERING INFORMATION

Example: AP2010100150KF or AP2010100150KF-ST. Accessories / Power Supplies ordered separately.

AP2010		0					-	
Model #	**CRI**	**Power**	**Accessories**	**CCT**	**Optics**	**Finish**		
AP2010	**0** - CRI 80 (not available on 2200K) **1** - CRI>90	**0** - See Drivers on page 2	**00** - None **01** - Honeycomb **02** - Anti-Glare **NOTE:** *Honeycomb Louvre and Anti-glare Shield not available on 0D (Diffuse) or 0W (16°x67°)*	**N** - 2200K *(CRI>90 only)* **F** - 2700K **5** - 3000K **9** - 4000K	**0S** - 16° **0M** - 26° **0L** - 38° **0K** - 57° **0W** - 16° x 67° **0D** - Diffuse	**H** - Anthracite **T** - Cor-ten **F** - Gray **E** - White **7** - Primer **C** - Custom RAL *(consult factory for "C")*	**.ST** **.NAT** ***NOTE:** Add suffix if fixture is going to used in steam room or natatorium (up to 5ppm chlorine). NOT for use in saunas.*	

Job Name/Date:

Fixture Type Designation:

sales@designplan.com
www.designplan.com

79 Trenton Avenue, Frenchtown NJ 08825

© Copyright 2023 Designplan Lighting, Inc.

Published: November 17, 2026

P: 908-996-7710
F: 908-996-7042

BELOW DRIVERS for GENERAL USE, NATATORIUM OR JA8 *(Not Suitable for Steam Rooms)*

SUGGESTED POWER SUPPLIES - 500mA - JA8 Compatible *(Also for General Use)*

Part Number	Description	Input/Output	# of Fixtures
PPLT00465-P	0-10V Dimming to 1.0%	120-277VAC to 500mA, 20W, Class 2, DAMP	1-1

SUGGESTED POWER SUPPLIES - 500mA - FOR GENERAL USE / NATATORIUM *(Not Steam Rooms or JA8 Compatible)*

Part Number	Description	Input/Output	# of Fixtures
PPLT00262	Leading / Trailing Edge Dimmable to 10% (120V only)	120-277VAC to 500mA, 32W, Class 2	2-2
PPLT00467-P	0-10V Dimming to 1.0%	120-277VAC to 500mA, 50W, Class 2, DAMP	1-3
PPLT00561-P	0-10V Dimming to 0.1%	120-277VAC to 500mA, 100W, Class 2	1-4

Suggested Lutron Compatible - 500mA - FOR GENERAL USE / NATATORIUM *(Not Steam Rooms or JA8 Compatible)*

Part Number	Option	Lutron SKU	Dim Range	Description	Input/Output	# of Fixtures
PPLT00676	PEQ0E	PEQ0	100%-0.1%	Hi-Lume™ Premier 0.1% EcoSystem™ F2B	120-277VAC to 500mA, 20W, Class 2	1-1

For other power supply options consult factory.

BELOW DRIVERS ONLY FOR STEAM ROOM VERSIONS

SUGGESTED POWER SUPPLIES - 350mA - FOR STEAM ROOMS ONLY *(Not JA8 Compatible)*

Part Number	Description	Input/Output	# of Fixtures
PPLT00263	Leading / Trailing Edge Dimmable to 10% (120V only)	120-277VAC to 350mA, 32W, Class 2	2-2
PPLT00467-P	0-10V Dimming to 1.0%	120-277VAC to 350mA, 50W, Class 2, DAMP	1-3
PPLT00561-P	0-10V Dimming to 0.1%	120-277VAC to 350mA, 100W, Class 2	1-4

For other power supply options consult factory.

Job Name/Date:

Fixture Type Designation:

sales@designplan.com
www.designplan.com

79 Trenton Avenue, Frenchtown NJ 08825

© Copyright 2023 Designplan Lighting, Inc.

Published: November 17, 2026

P: 908-996-7710
F: 908-996-7042

ACCESSORIES

Installation

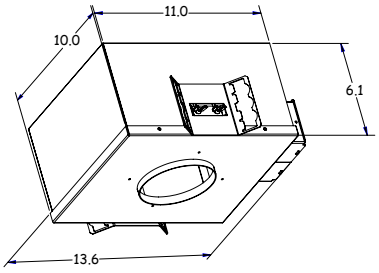

WCA18-DP
IC / JA8 Housing



WGA02
Retaining Spring Clip
Use for ceilings 3/64” min. to 1 3/8” max. thick



WCA18
Housing for Concrete Ceilings

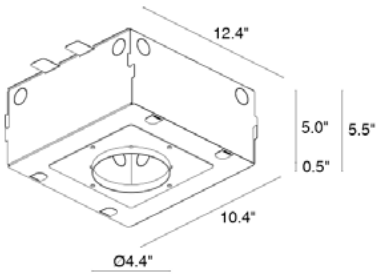

Anti-Glare

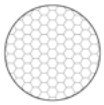

Honeycomb Louvre
Built into the fixture
The honeycomb louvre can be provided on all fixed optics except for diffuse and elliptical optics



Anti-glare Shield
Built into the fixture
The anti-glare shield can be provided on all fixed optics except for diffuse and elliptical optics

Various



WNAP10A0
Anti-Fall Kit

PHOTOMETRIC DATA

See IES Files

Job Name/Date:

Fixture Type Designation:

sales@designplan.com
www.designplan.com

79 Trenton Avenue, Frenchtown NJ 08825

© Copyright 2023 Designplan Lighting, Inc.

Published: November 17, 2026

P: 908-996-7710
F: 908-996-7042