FLEA MAXI UNDERWATER RGBW ROUND

12W, REMOTE FOUNTAIN/POOL APPROVED 24VDC

installation instructions

INSTRUCTIONS PERTAINING TO RISK OF FIRE OR INJURY TO PERSONS. READ ALL INSTRUCTIONS. IMPORTANT SAFETY INSTRUCTIONS. SAVE THESE INSTRUCTIONS.

DANGER - RISK OF SHOCK - DISCONNECT POWER BEFORE INSTALLATION! Please read all instructions before installation.

- Keep these instructions for future reference.
- Must be installed by a qualified electrician in accordance with national and local standards. Designplan is not responsible for fixtures installed without regard to these standards.
- Unauthorized alterations or tampering of product voids warranty.
- The main power connection must be in accordance with local electrical codes.
- Suitable for OUTDOOR applications.



IP68

Electrical Connections:

- LED lights must be **connected in parallel** respecting polarities.
- **CHOOSE POWER SUPPLY ACCORDINGLY.** Please consider the voltage through which fixtures are fed as well as the max power consumption.
- **Connect power only if all the fixtures are connected.**
- This unit must be used in conjunction with a suitable fountain rated power supply.
- Use only Class 2 type electronic power supply.
- Never use switches on secondary circuit.

Maintenance

Scheduled maintenance must be carried out once a year on all lighting devices, regardless of appliance class and type of use. It must include the following operations:

- Periodically clean fixtures to remove dirt from gratings and screw heads.
- Check tightness of screws on various parts of the device.
- Check that all cable glands and cables are intact and tight. Check that the glass or plastic lens is intact, and replace it if broken or damaged.
- The internal components such as the ballast, driver, washers and screws must not show clear signs of oxidation or rust. Clear traces of rust and oxidation will indicate the presence of water inside the device.
- In the case of damage, the components must be replaced by original components or spare parts.

sales@designplan.com
www.designplan.com

79 Trenton Avenue, Frenchtown NJ 08825
© Copyright 2025 Designplan Lighting, Inc.
P: 908-996-7710
F: 908-996-7042

FLEA MAXI UNDERWATER RGBW ROUND

12W, REMOTE FOUNTAIN/POOL APPROVED 24VDC

installation instructions

FIXTURE DIMENSION:

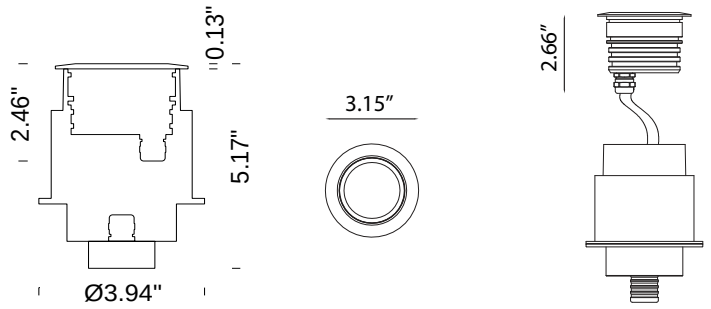

FLEA MAXI Underwater Round

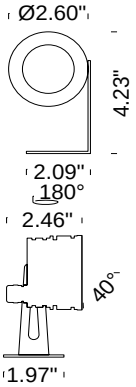

FLEA MAXI Underwater Spot

FIXTURE INSTALLATION

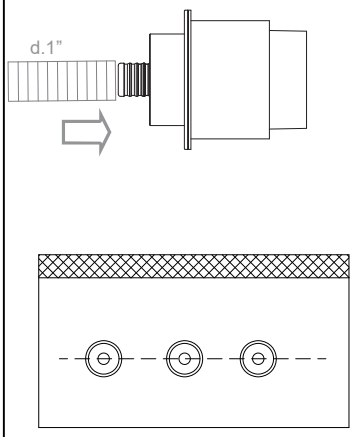

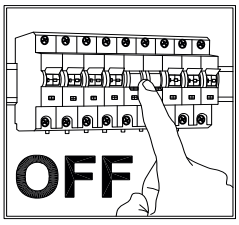

Junction box

To put the junction box in the cement.

To put the corrugate tube (diam.1”) on the connection present on the junction box making moderate pressure.

To verify that line-up of the junction box must be horizontal.

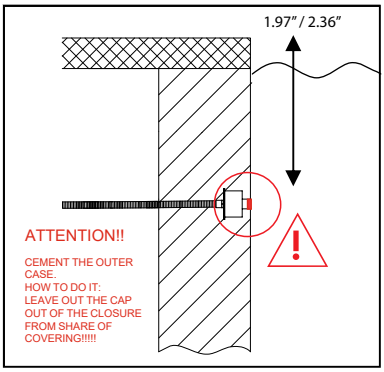

Fixing of junction box

To fix the junction box at 1.97” / 2.36” *of depht respect water level to proceed at maintenance of fitting without to empty swimming pool.*

sales@designplan.com
www.designplan.com

79 Trenton Avenue, Frenchtown NJ 08825

© Copyright 2025 Designplan Lighting, Inc.

P: 908-996-7710
F: 908-996-7042

FLEA MAXI UNDERWATER RGBW ROUND

12W, REMOTE FOUNTAIN/POOL APPROVED 24VDC

installation instructions

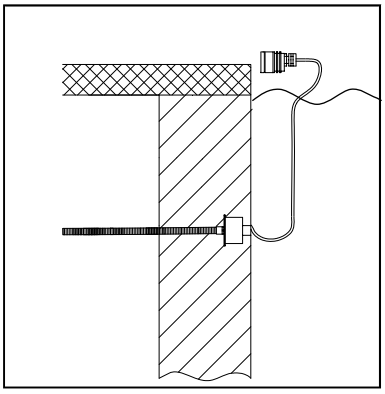

Fixing product

After fixing the product to put cable supplied in relative plastic cable-blocker and then to close it. It is important to close cable blocker correctly to guarantee watertight of fitting.
We suggest to keef 1.57″ / 1.97″ *of cable in junction box in order to draw up the fitting easily for eventual maintenance.*

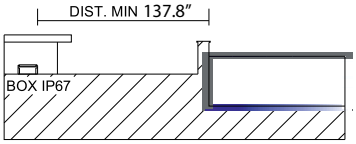

Position of control gear
As regards the position of control gear please follow the relative normatives electro-technique for the installation. We are giving you some specifications:

- to install in remote position, minimum 137.8″ *of distance from water.*
- control gear has IP67 of protection and it must be kept dry; temporarily (max.30minutes) it resists to eventual submersion.

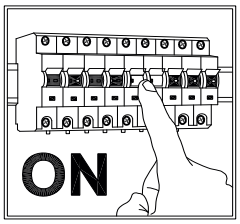

MAINTENANCE

In case of replacement of the bright source you have to respect the parameters indicated inside mark in the fixture.
In case of breaking or crack of diffuser to call our company in order to make the exact replacement.
It is important to clean the fitting in order to avoid dirty deposit on the rubber closing basket and inside the fixture.
To clear the glass not use abrasive products.

sales@designplan.com
www.designplan.com

79 Trenton Avenue, Frenchtown NJ 08825
© Copyright 2025 Designplan Lighting, Inc.
P: 908-996-7710
F: 908-996-7042

Wiring Diagram

RGBW CONTROLLER

DMX

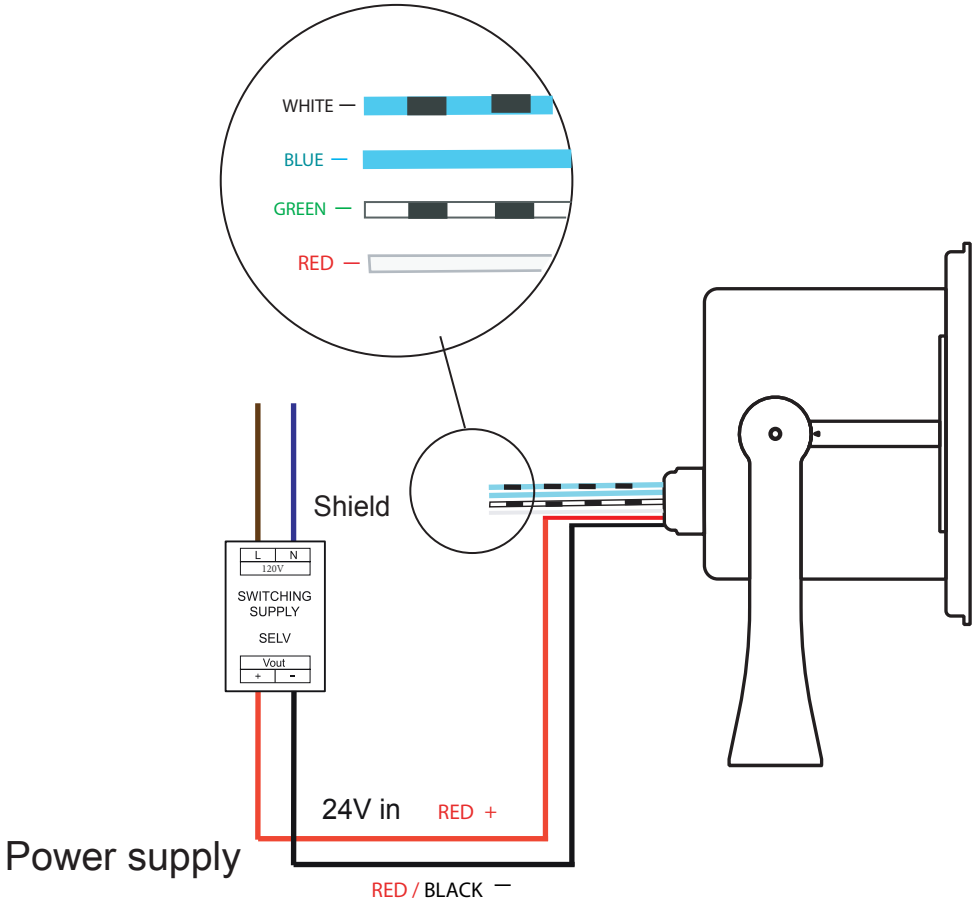

- Only power up the system once all the lamps are connected. Connecting an individual lamp to an active power supply may cause the lamp to break due to over-voltage.
- Lamps and power supply units must be installed in well-ventilated boxes or locations to allow a natural heat diffusion and avoid the devices overheating.
- On the power system, install a surge protection device to reduce the intensity of any voltage spikes, to protect the lighting fixtures from the risk of damage.
- Fixture NOT suitable for covering with thermally insulating material.

sales@designplan.com
www.designplan.com

79 Trenton Avenue, Frenchtown NJ 08825

© Copyright 2025 Designplan Lighting, Inc.

P: 908-996-7710
F: 908-996-7042