OLO WOOD 1.0, 1.1

14W/19W, INTEGRAL 120-277VDC

installation instructions

INSTRUCTIONS PERTAINING TO RISK OF FIRE OR INJURY TO PERSONS. READ ALL INSTRUCTIONS. IMPORTANT SAFETY INSTRUCTIONS. SAVE THESE INSTRUCTIONS.

DANGER - RISK OF SHOCK - DISCONNECT POWER BEFORE INSTALLATION! Please read all instructions before installation.

- Keep these instructions for future reference.
- Must be installed by a qualified electrician in accordance with national and local standards. Designplan is not responsible for fixtures installed without regard to these standards.
- Unauthorized alterations or tampering of product voids warranty.
- The main power connection must be in accordance with local electrical codes.
- Suitable for OUTDOOR applications.

IP66 IK10

ATTENTION: **For In-Grade** - It is the contractor's responsibility to seal the conduit with "Great Stuff" aerosol seal that prevents water and moisture penetration for ultimate protection. Contractor **MUST** use gel-filled wire nuts.

Maintenance

Scheduled maintenance must be carried out once a year on all lighting devices, regardless of appliance class and type of use. It must include the following operations:

- Periodically clean fixtures to remove dirt from gratings and screw heads.
- Check tightness of screws on various parts of the device.
- Check that all cable glands and cables are intact and tight. Check that the glass or plastic lens is intact, and replace it if broken or damaged.
- The internal components such as the ballast, driver, washers and screws must not show clear signs of oxidation or rust. Clear traces of rust and oxidation will indicate the presence of water inside the device.
- In the case of damage, the components must be replaced by original components or spare parts.

sales@designplan.com
www.designplan.com

79 Trenton Avenue, Frenchtown NJ 08825
© Copyright 2026 Designplan Lighting, Inc.
P: 908-996-7710
F: 908-996-7042

FIXTURE DIMENSION:

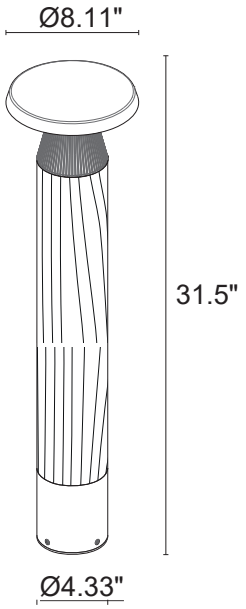

Olo Wood 1.0

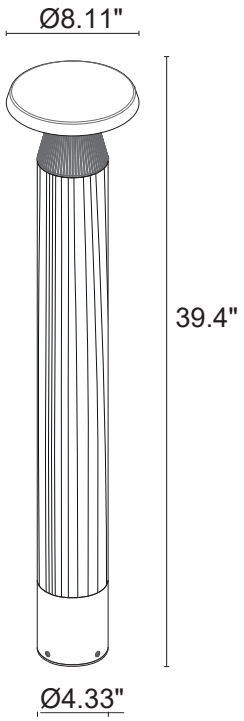

Olo Wood 1.1

FIXTURE INSTALLATION:

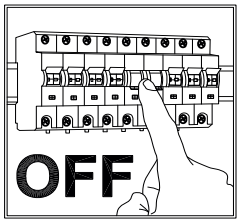

- It is the contractor's responsibility to caulk around all the edges between the fixture and the mounting surface, to satisfy wet label requirements.
- It is the contractor's responsibility to install Remote Driver in a suitable electrical enclosure.

© Copyright 2026 Designplan Lighting, Inc.

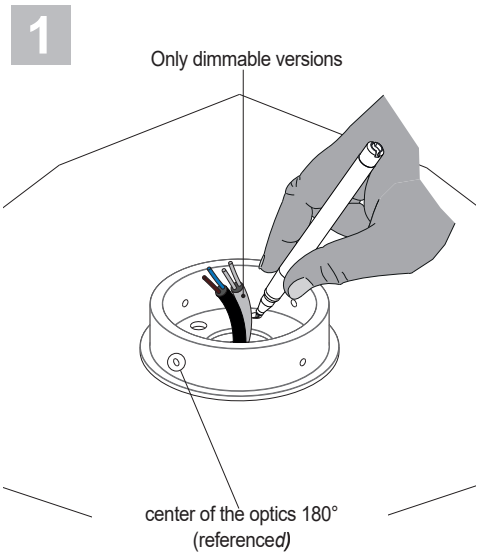

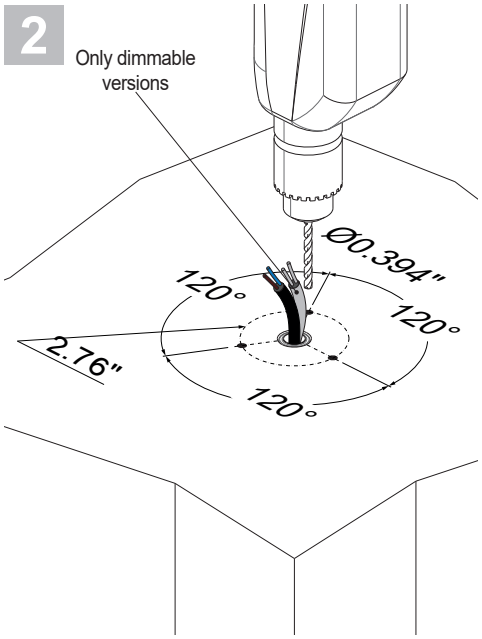

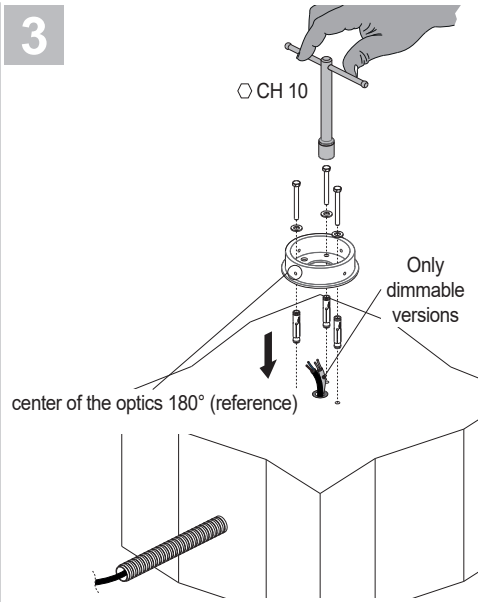

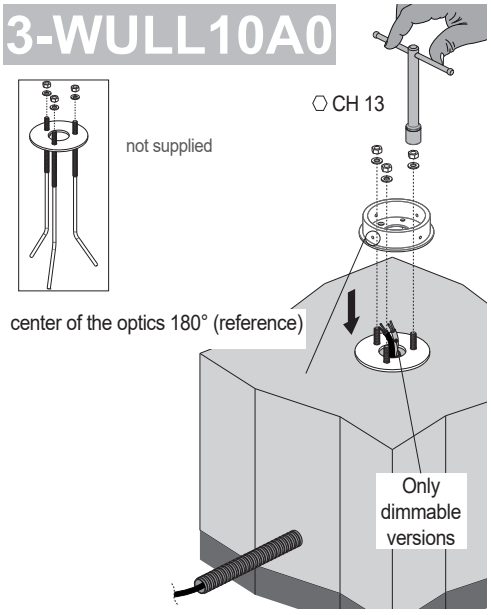

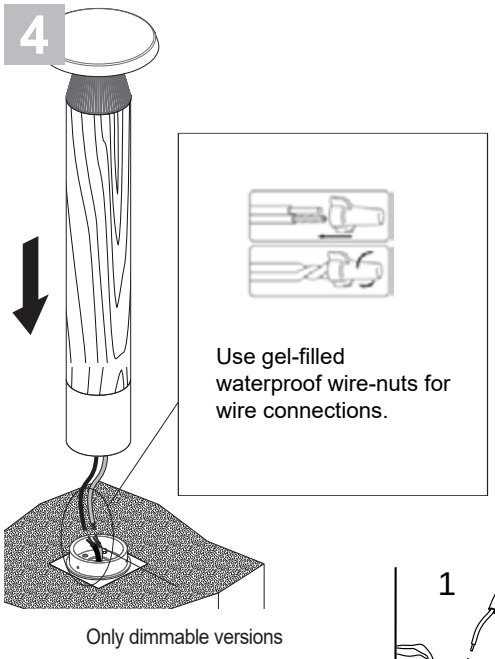

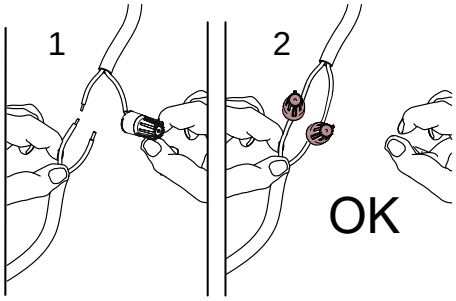

© Copyright 2026 Designplan Lighting, Inc.

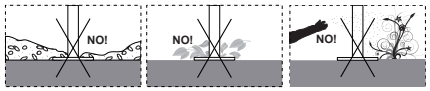

Never cover the visible parts of the product. Any metal part must not be in direct contact with the ground or in contact with aggressive chemical elements (ex. fertilizers, herbici-des, lime, aggressive cleaners).

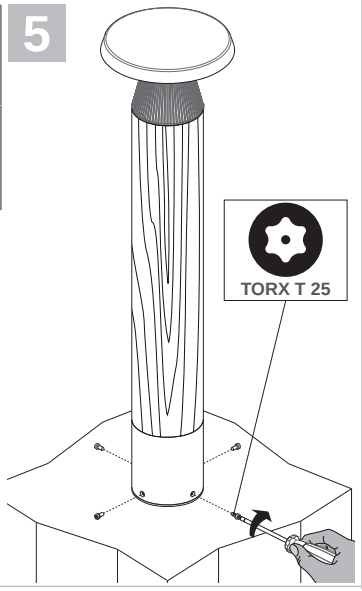

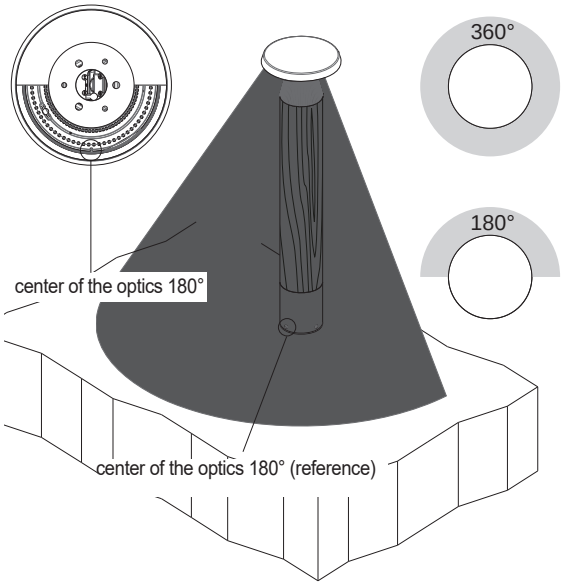

Head tilt adjustment

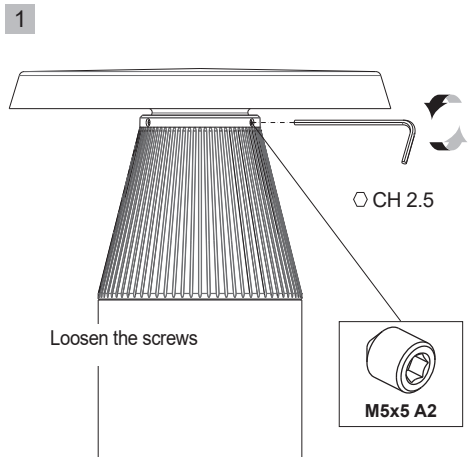

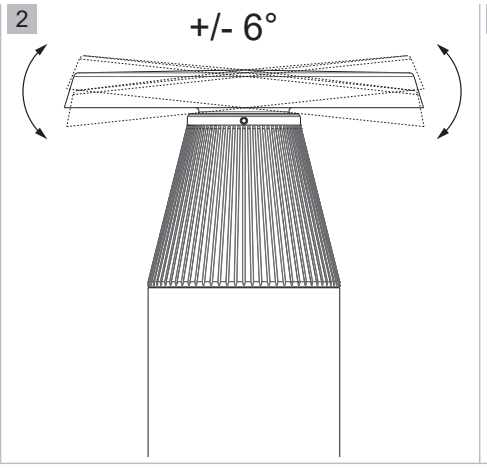

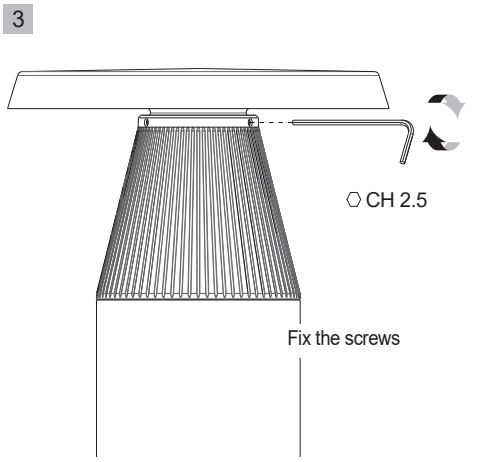

© Copyright 2026 Designplan Lighting, Inc.

IN-OUT connection

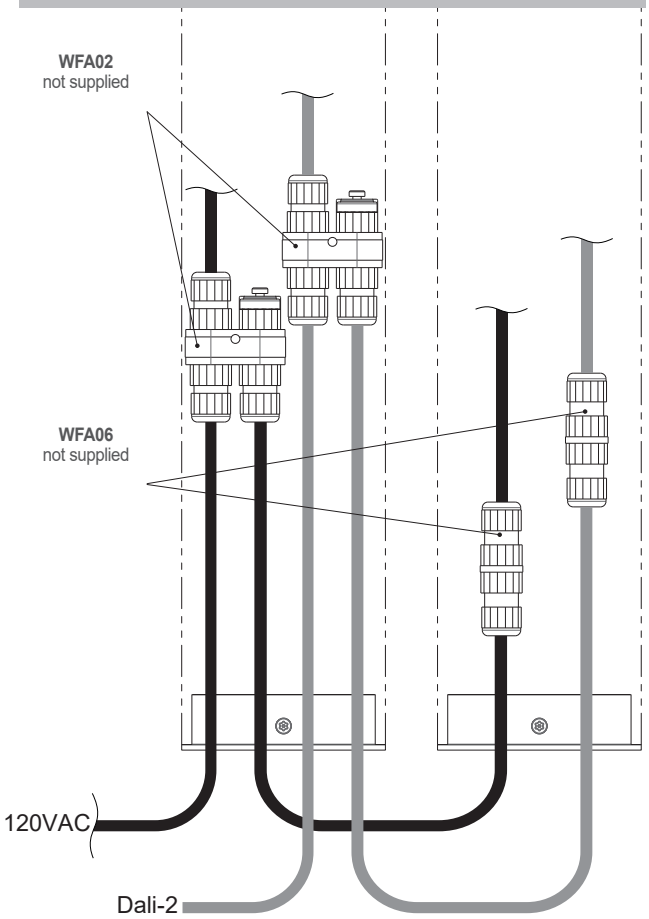

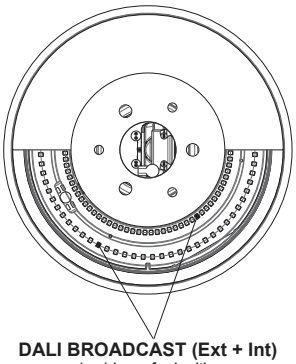

DALI BROADCAST (Ext + Int)
1 address for ignition

DALI MASTER (DT6)
2 addresses for 2 independent starts

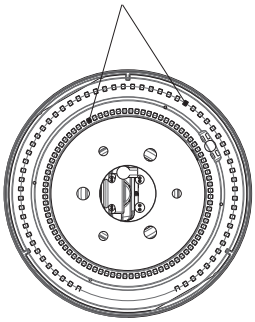

DALI BROADCAST (Ext + Int)

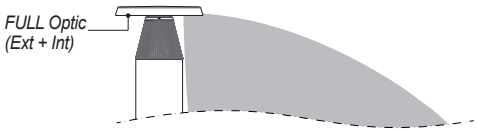

DALI MASTER (DT6)

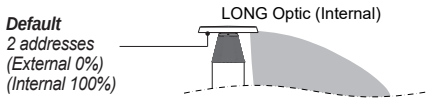

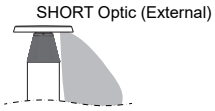

The allocation of the various addresses is random, not sequential.

sales@designplan.com
www.designplan.com

79 Trenton Avenue, Frenchtown NJ 08825

© Copyright 2026 Designplan Lighting, Inc.

P: 908-996-7710
F: 908-996-7042