SPY 70 RGBW FLOODLIGHT

datasheet

SPY is a versatile outdoor floodlight, also available as a downlight, that comes in three sizes and is 355° rotatable, for fulfilling every lighting situation. It has optics set back from the edge of the main body to allow precision without glare. Spy 70 RGBW is the medium size version with a 2.8" diameter, 9W of power and Color Boost® RGBW technology. Color Boost® is a new optimization that enables up-to-3-times-higher light output that varies depending on the color. Dark Sky compliant for output below 80°.



SPY 70 RGBW FLOODLIGHT



SPY 70 RGBW FLOODLIGHT POLE

Fixture Dimensions - see page 2

TECHNICAL DATA

Wattage	9W
Power Supply	Remote 24VDC, not included. See page 3
Dimming	DMX with Integral DMX Decoder
Construction	Body: 6026 Anticorodal Aluminum Bracket: Extruded Aluminum Peg / Visor: Stainless Steel Lens: Extra Clear Tempered Glass
CCT	RGBW (Color Boost® Technology, see page 2)
CRI	>80
Delivered Lumens	598 lm: (R) 127, (G) 224, (B) 31, (W) 216 Dark Sky compliant, output below 80°
Efficacy	66.4 lm/W
Optics	11°, 26°, 42°
Finishes	Anthracite, Dark Brown, Dark Green
Lumen Maintenance	60,000 hrs (Ta 50°C)
Fixture Dimensions	Ø 2.76" x 3.94" l x 5.00" h Pole heights: 16.14", 27.95", 39.76" Base: Ø2.76" Spike: Ø0.79" x 9.84" h
IP Rating	IP66
Impact Resistance	IK06

ORDERING INFORMATION

Example: F43178.1.5.88.01.US. Power Supplies / Accessories ordered separately.

	.		. **5** .		.US

Model No.	Finish	CCT	Optics	Cable Length	
F43175 - Flood	**1** - Anthracite	**5** - RGBW	**15** - 11°	**01** - 4.92' (Core-DMX)	**.US**
F43176 - w/ Base 16.14" h	**8** - Dark Brown		**88** - 26°		
F43177 - w/ Base 27.95" h	**D** - Dark Green		**92** - 42°		
F43178 - w/ Base 39.76" h					
F43179 - w/ Spike 16.14" h					
F43180 - w/ Spike 27.95" h					
F43181 - w/ Spike 39.76" h					

Job Name/Date:

Fixture Type Designation:

sales@designplan.com
www.designplan.com

79 Trenton Avenue, Frenchtown NJ 08825

© Copyright 2025 Designplan Lighting, Inc.

Published: November 24, 2026

P: 908-996-7710
F: 908-996-7042

SPY 70 RGBW FLOODLIGHT

datasheet

FIXTURE DIMENSIONS

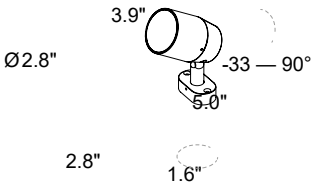

SPY 70 FLOOD

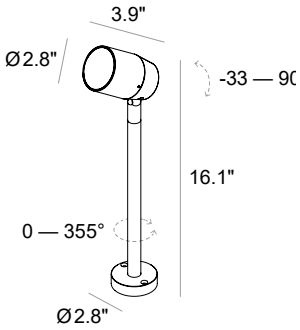

SPY 70 FLOOD / Base
16.1 in

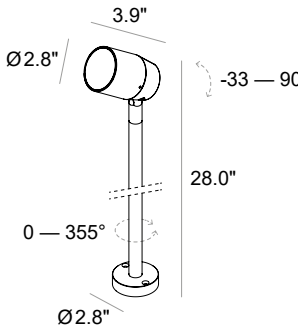

SPY 70 FLOOD / Base
28.0 in

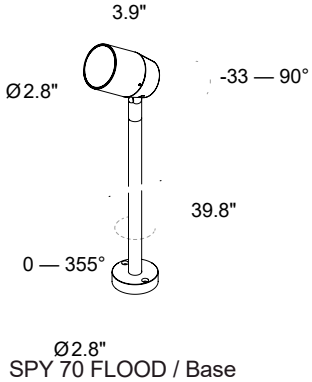

SPY 70 FLOOD / Base
39.8 in

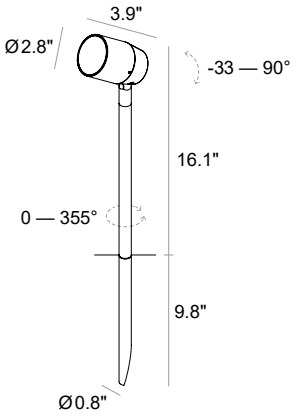

SPY 70 FLOOD / Spike
16.1 in

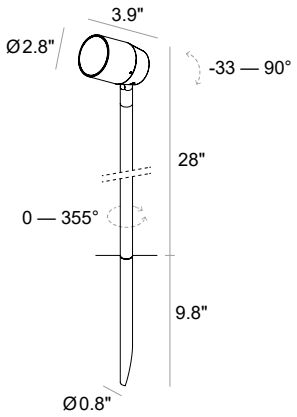

SPY 70 FLOOD / Spike
28.0 in

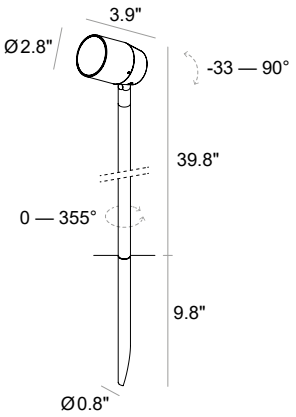

SPY 70 FLOOD / Spike
39.8 in

COLOR BOOST® TECHNOLOGY

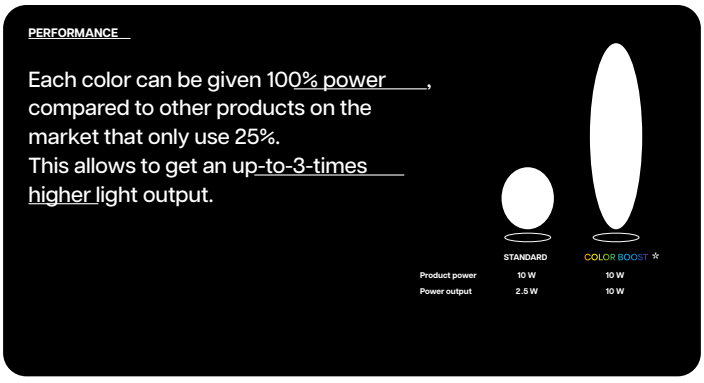

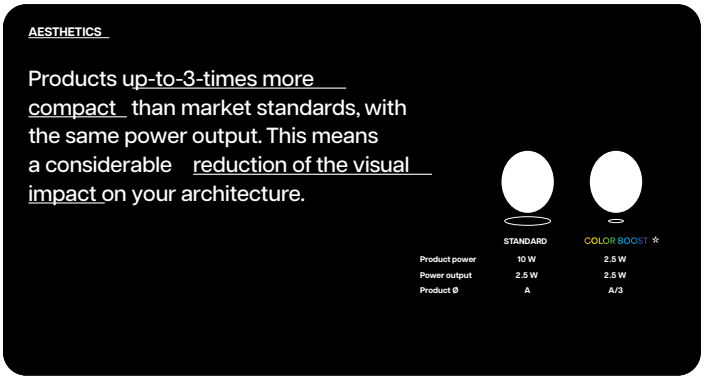

Job Name/Date:

Fixture Type Designation:

sales@designplan.com
www.designplan.com

79 Trenton Avenue, Frenchtown NJ 08825

© Copyright 2025 Designplan Lighting, Inc.

Published: November 24, 2026

P: 908-996-7710
F: 908-996-7042

SUGGESTED POWER SUPPLIES

24VDC

Part Number	Description	Input/Output	# of Fixtures
PPLT00481	Non-Dim	120-277VAC to 24VDC, 24W, Class 2	1-2
PPLT00567	Non-Dim	120VAC to 24VDC, 36W, Class 2	1-3
PPLT00691	Non-Dim	120-277VAC to 24VDC, 60W, Class 2, IP67	1-5
PPLT00284	Non-Dim	120-277VAC to 24VDC, 100W, Class 2, DAMP	1-8

For other power supply options consult factory.

ACCESSORIES

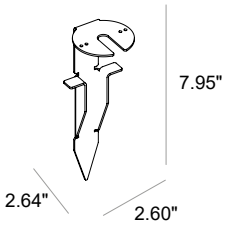

A9903
Steel Stake

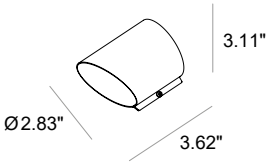

A0019
Visor

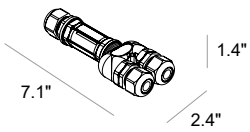

A9909
Connection DMX
In-Out (24V DC-DMX

ACCESSORIES

Controllers (RGBW)

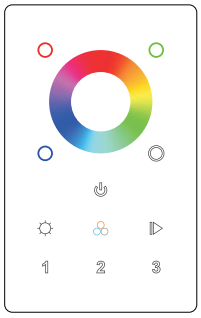

PPWD00570 **- RGBW DMX512+Wifi Controller**
Touch Sensitive
Can be controlled by WiFi
Controls 3 zones synchronously and separately

Job Name/Date:

Fixture Type Designation:

sales@designplan.com
www.designplan.com

79 Trenton Avenue, Frenchtown NJ 08825

© Copyright 2025 Designplan Lighting, Inc.

Published: November 24, 2026

P: 908-996-7710
F: 908-996-7042