SPY 90 RGBW FLOODLIGHT

datasheet

SPY is a versatile outdoor floodlight, also available as a downlight, that comes in three sizes and is 355° rotatable, for fulfilling every lighting situation. It has optics set back from the edge of the main body to allow precision without glare. Spy 90 RGBW is the largest size with a 3.5" diameter, 20W of power and Color Boost® RGBW technology. Color Boost® is a new optimization that enables up-to-3-times-higher light output that varies depending on the color. Dark Sky compliant for output below 80°.



SPY 90 RGBW FLOODLIGHT



SPY 90 RGBW FLOODLIGHT POLE

Fixture Dimensions - see page 2

TECHNICAL DATA

Wattage	20W
Power Supply	Remote 24VDC, not included. See page 3
Dimming	DMX with Integral DMX Decoder
Construction	Body: 6026 Anticorodal Aluminum Bracket: Extruded Aluminum Peg / Visor: Stainless Steel Lens: Extra Clear Tempered Glass
CCT	RGBW (Color Boost® Technology, see page 2)
CRI	>80
Delivered Lumens	974 lm: (R) 234, (G) 329, (B) 51, (W) 360 Dark Sky compliant, output below 80°
Efficacy	48.7 lm/W
Optics	11°, 26°, 42°
Finishes	Anthracite, Dark Brown, Dark Green
Lumen Maintenance	55,000 hrs (Ta 50°C)
Fixture Dimensions	Ø3.54" x 4.65" l x 5.83" h Pole heights: 16.93", 28.74", 40.55" Base: Ø2.76" Spike: Ø0.79" x 9.84" h
IP Rating	IP66
Impact Resistance	IK06

ORDERING INFORMATION

Example: F43189.1.5.88.01.US. Power Supplies / Accessories ordered separately.

	.		. **5** .		.US

Model No.	Finish	CCT	Optics	Cable Length	
F43189 - Flood	**1** - Anthracite	**5** - RGBW	**15** - 11°	**01** - 4.92' (Core-DMX)	**.US**
F43190 - w/ Base 16.93" h	**8** - Dark Brown		**88** - 26°		
F43191 - w/ Base 28.74" h	**D** - Dark Green		**92** - 42°		
F43192 - w/ Base 40.55" h					
F43193 - w/ Spike 16.93" h					
F43194 - w/ Spike 28.74" h					
F43195 - w/ Spike 40.55" h					

Job Name/Date:

Fixture Type Designation:

sales@designplan.com
www.designplan.com

79 Trenton Avenue, Frenchtown NJ 08825

© Copyright 2025 Designplan Lighting, Inc.

Published: November 24, 2026

P: 908-996-7710
F: 908-996-7042

SPY 90 RGBW FLOODLIGHT

datasheet

FIXTURE DIMENSIONS

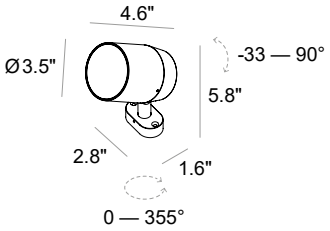

SPY 90 FLOOD

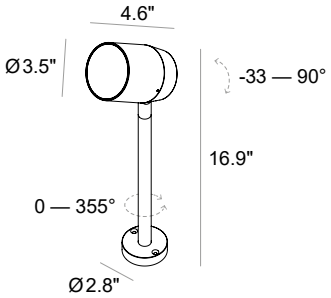

SPY 90 FLOOD / Base
16.9 in

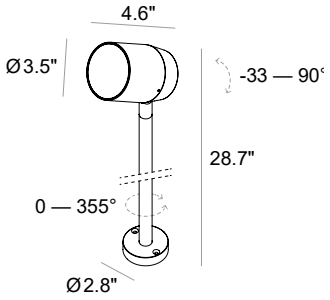

SPY 90 FLOOD / Base
28.7 in

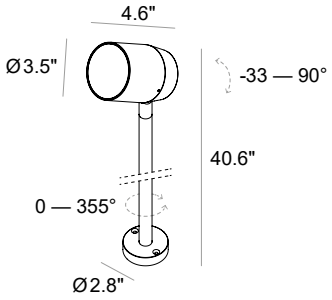

SPY 90 FLOOD / Base
40.6 in

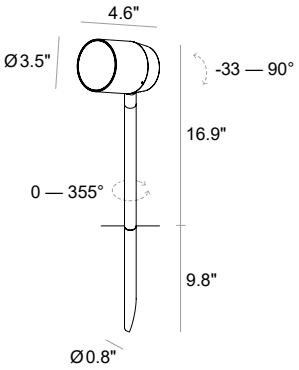

SPY 90 FLOOD / Spike
16.9 in

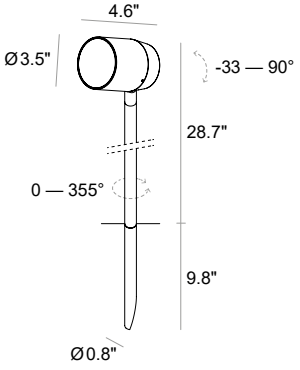

SPY 90 FLOOD / Spike
28.7 in

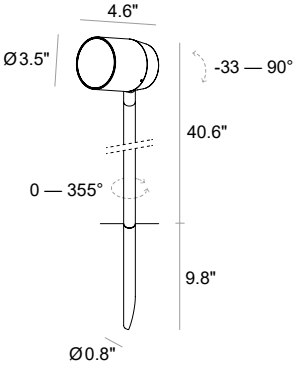

SPY 90 FLOOD / Spike
40.6 in

COLOR BOOST® TECHNOLOGY

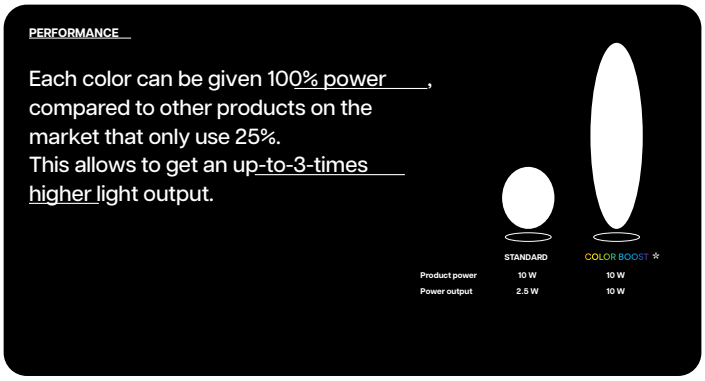

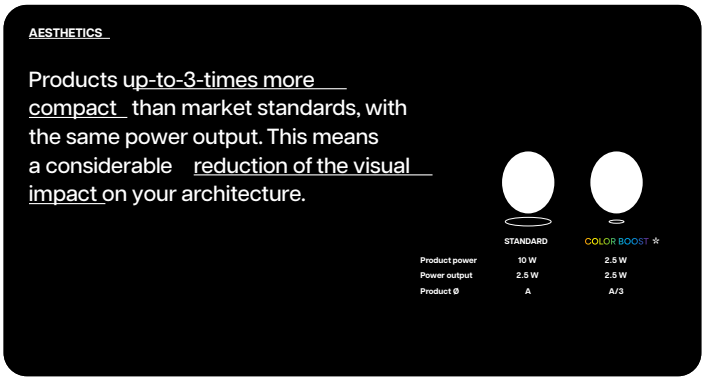

Job Name/Date:

Fixture Type Designation:

sales@designplan.com
www.designplan.com

79 Trenton Avenue, Frenchtown NJ 08825

© Copyright 2025 Designplan Lighting, Inc.

Published: November 24, 2026

P: 908-996-7710
F: 908-996-7042

SUGGESTED POWER SUPPLIES

24VDC

Part Number	Description	Input/Output	# of Fixtures
PPLT00567	Non-Dim	120VAC to 24VDC, 36W, Class 2	1-1
PPLT00691	Non-Dim	120-277VAC to 24VDC, 60W, Class 2, IP67	1-2
PPLT00284	Non-Dim	120-277VAC to 24VDC, 100W, Class 2, DAMP	1-4

For other power supply options consult factory.

ACCESSORIES

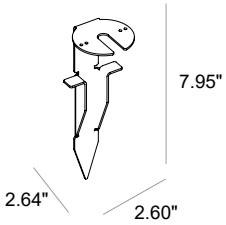

A9903
Steel Stake

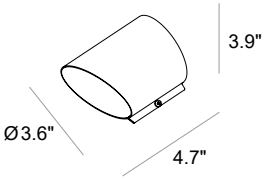

A0020
Visor

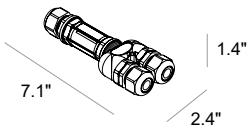

A9909
Connection DMX
In-Out (24V DC-DMX

ACCESSORIES

Controllers (RGBW)

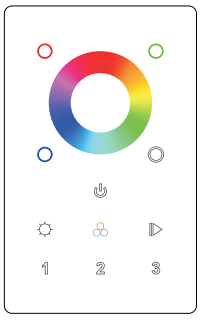

PPWD00570 **- RGBW DMX512+Wifi Controller**
Touch Sensitive
Can be controlled by WiFi
Controls 3 zones synchronously and separately

Job Name/Date:

Fixture Type Designation:

sales@designplan.com
www.designplan.com

79 Trenton Avenue, Frenchtown NJ 08825

© Copyright 2025 Designplan Lighting, Inc.

Published: November 24, 2026

P: 908-996-7710
F: 908-996-7042