MICRO SQUID

2W(STATIC / RGBW), REMOTE FOUNTAIN/POOL APPROVED 24VDC

installation instructions

INSTRUCTIONS PERTAINING TO RISK OF FIRE OR INJURY TO PERSONS. READ ALL INSTRUCTIONS. IMPORTANT SAFETY INSTRUCTIONS. SAVE THESE INSTRUCTIONS.

DANGER - RISK OF SHOCK - DISCONNECT POWER BEFORE INSTALLATION! Please read all instructions before installation.

- Keep these instructions for future reference.
- Must be installed by a qualified electrician in accordance with national and local standards. Designplan is not responsible for fixtures installed without regard to these standards.
- Unauthorized alterations or tampering of product voids warranty.
- The main power connection must be in accordance with local electrical codes.
- Suitable for OUTDOOR & FOUNTAIN applications.



IP68 IK10

Electrical Connections:

- LED lights must be **connected in parallel** respecting polarities.
- **CHOOSE POWER SUPPLY ACCORDINGLY.** Please consider the voltage through which fixtures are fed as well as the max power consumption.
- **Connect power only if all the fixtures are connected.**
- This unit must be used in conjunction with a suitable fountain rated power supply.
- Use only Class 2 type electronic power supply.
- Never use switches on secondary circuit.

ATTENTION: **For In-Grade** - It is the contractor's responsibility to seal the conduit with "Great Stuff" aerosol seal that prevents water and moisture penetration for ultimate protection. Contractor **MUST** use gel-filled wire nuts.

Maintenance

Scheduled maintenance must be carried out once a year on all lighting devices, regardless of appliance class and type of use. It must include the following operations:

- Periodically clean fixtures to remove dirt from gratings and screw heads.
- Check tightness of screws on various parts of the device.
- Check that all cable glands and cables are intact and tight. Check that the glass or plastic lens is intact, and replace it if broken or damaged.
- The internal components such as the ballast, driver, washers and screws must not show clear signs of oxidation or rust. Clear traces of rust and oxidation will indicate the presence of water inside the device.
- In the case of damage, the components must be replaced by original components or spare parts.

sales@designplan.com
www.designplan.com

79 Trenton Avenue, Frenchtown NJ 08825
© Copyright 2026 Designplan Lighting, Inc.
P: 908-996-7710
F: 908-996-7042

FIXTURE DIMENSION

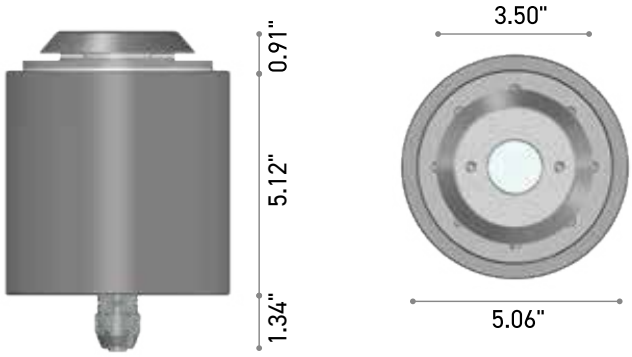

INSTALLATION RECOMMENDATIONS

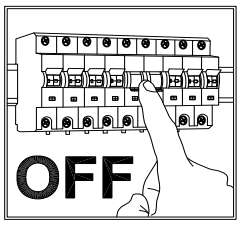

- It is the contractor's responsibility to caulk around all the edges between the fixture and the mounting surface, to satisfy wet label requirements.
- It is the contractor's responsibility to install Remote Driver in a suitable electrical enclosure.

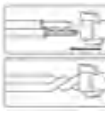

Use gel-filled waterproof wire-nuts for wire connections.

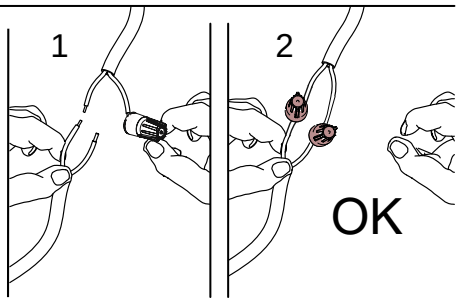

© Copyright 2026 Designplan Lighting, Inc.

INSTALLATION RECOMMENDATIONS

Installation scheme for concrete pool with PVC coating

* Material not Supplied

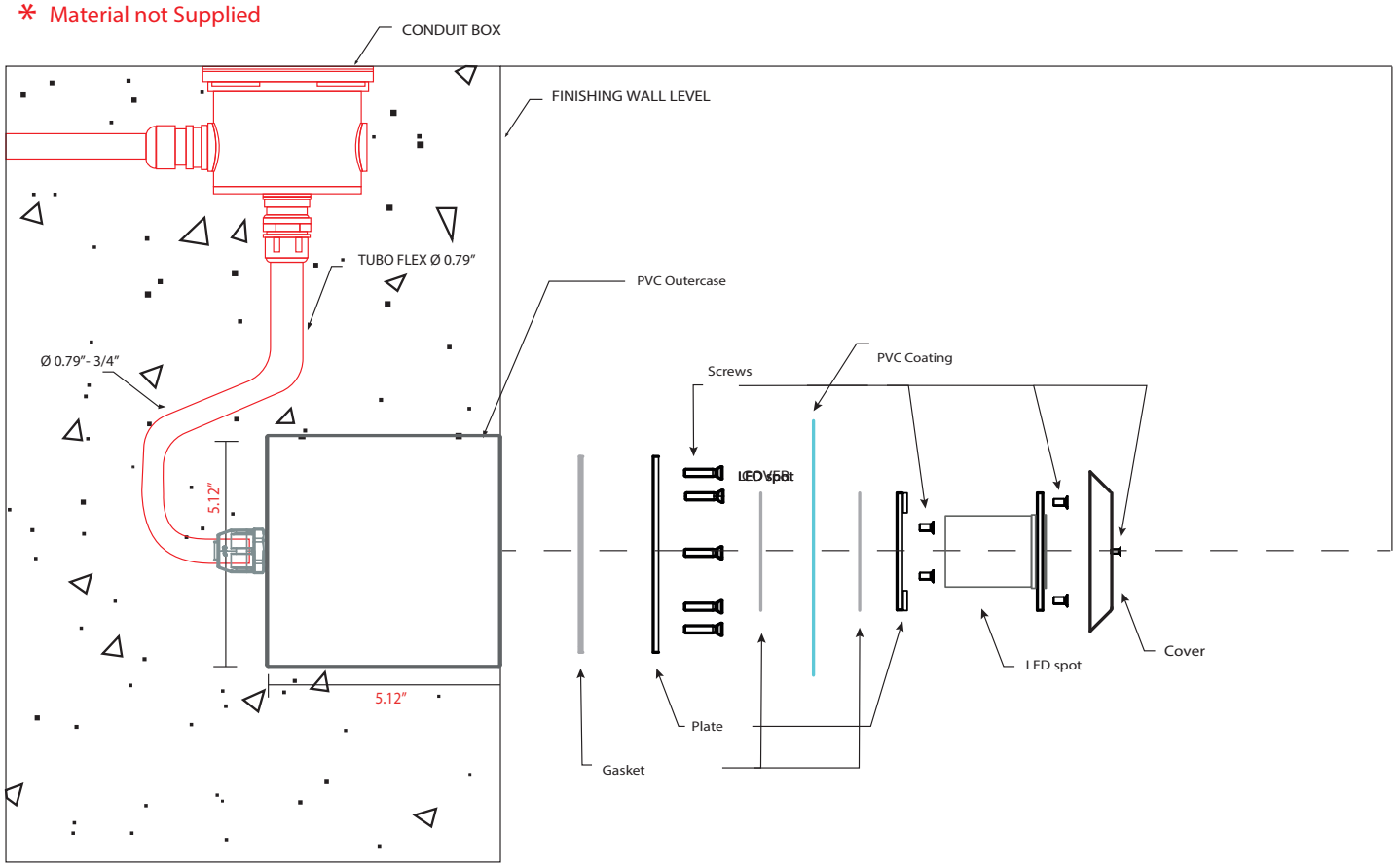

MINI SQUID installation scheme for PVC coating.

Recommended mounting height
-15.75" ÷ -23.6" from the edge of the water

© Copyright 2026 Designplan Lighting, Inc.

INSTALLATION RECOMMENDATIONS

Installation scheme for concrete pool with tiles coating

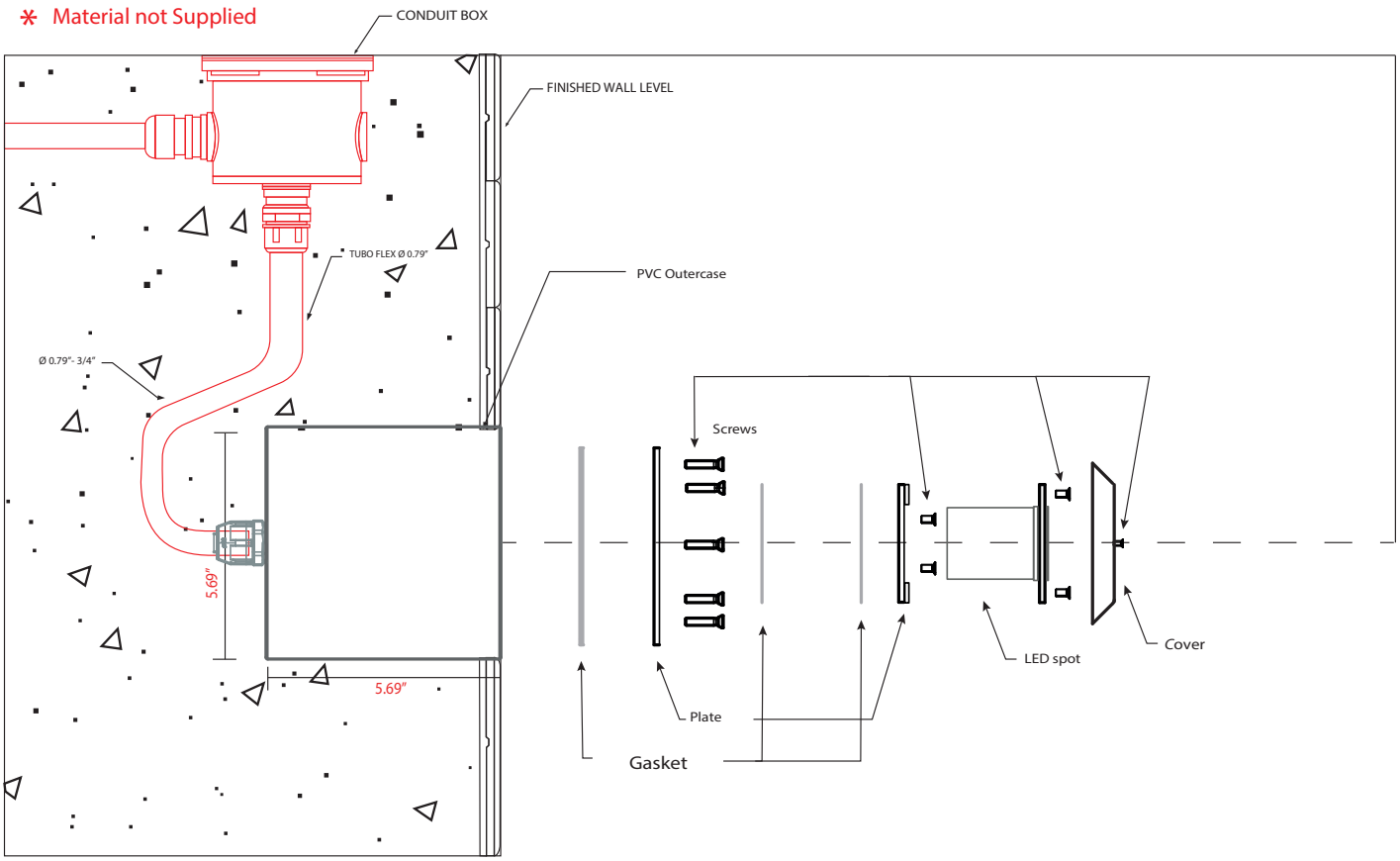

MINI SQUID installation scheme for concrete with tile.

Recommended mounting height
-15.75" ÷ -23.6" from the edge of the water

© Copyright 2026 Designplan Lighting, Inc.

INSTALLATION RECOMMENDATIONS

Installation scheme for concrete pool with PVC coating with No-Sealed PVC outercase

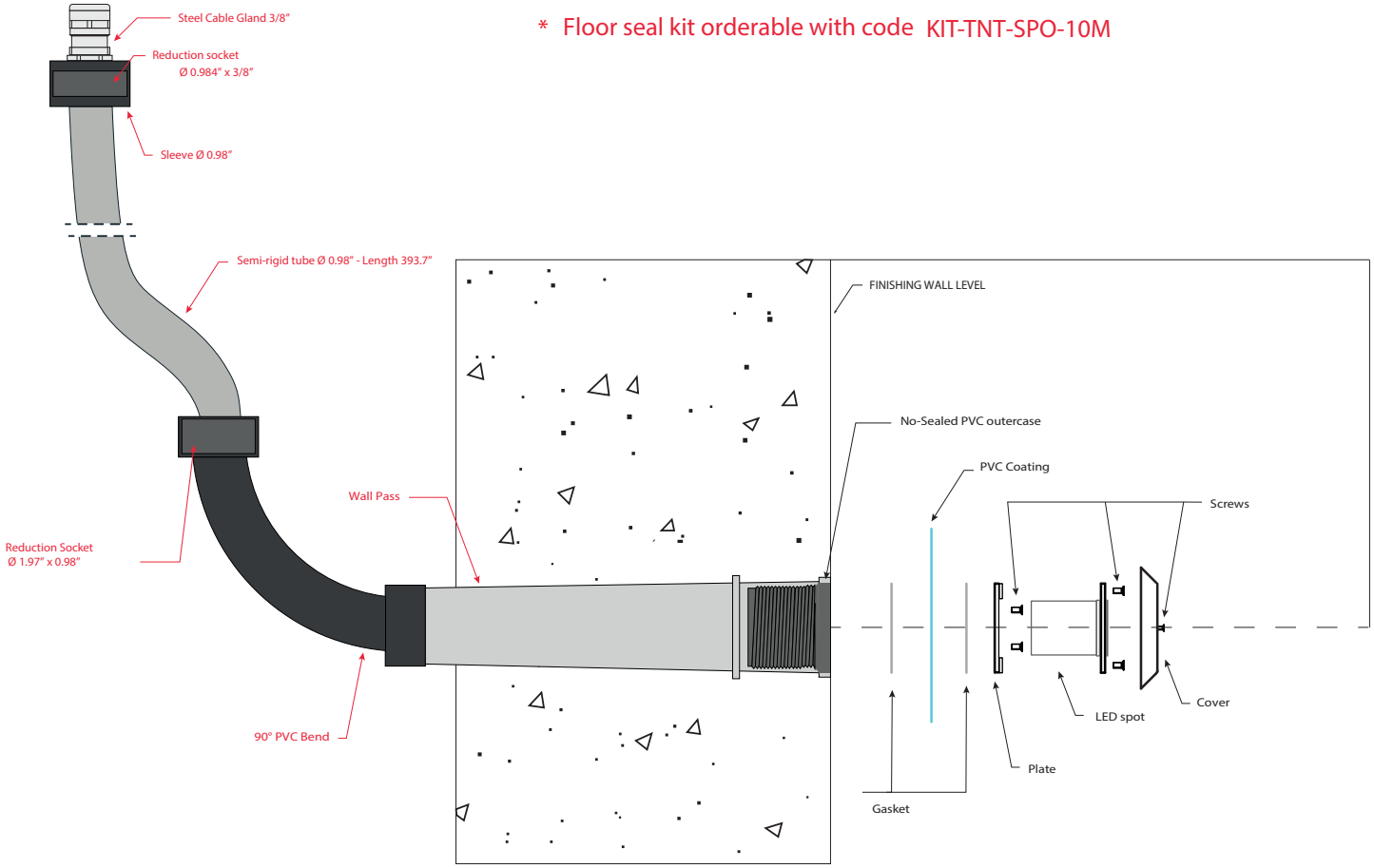

* Floor seal kit orderable with code KIT-TNT-SPO-10M

MINI SQUID installation scheme for concrete with PVC coating with No-Sealed PVC outercase.
Recommended mounting height -15.75" ÷ -23.62" in from the edge of the water

© Copyright 2026 Designplan Lighting, Inc.

INSTALLATION RECOMMENDATIONS

Installation scheme for concrete pool with tile coating with No-Sealed PVC outercase

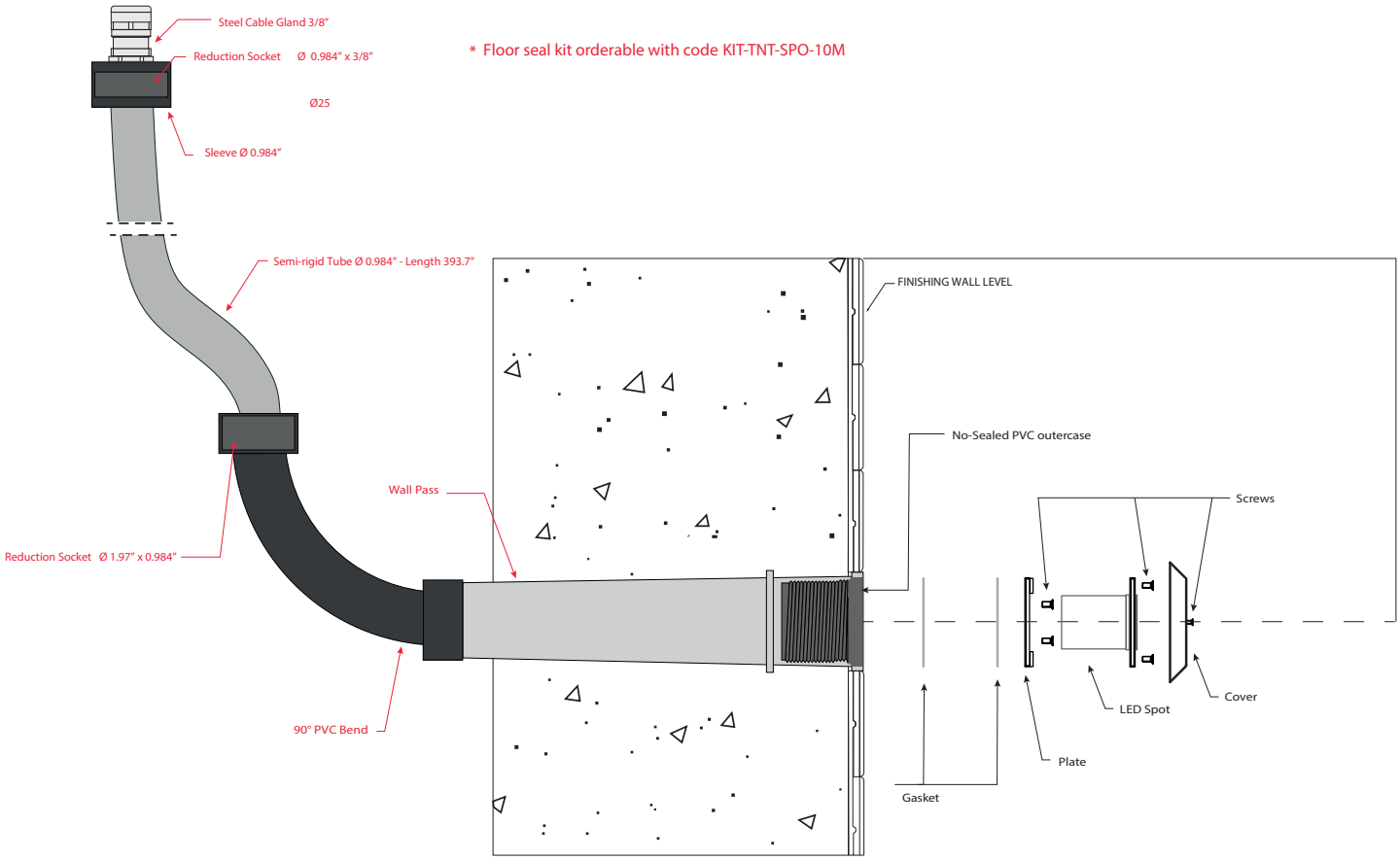

MINI SQUID installation scheme for concrete with tile coating with No-Sealed
Recommended mounting height -15.75" ÷ -23.62" in from the edge of the water

sales@designplan.com
www.designplan.com

79 Trenton Avenue, Frenchtown NJ 08825

© Copyright 2026 Designplan Lighting, Inc.

P: 908-996-7710
F: 908-996-7042

INSTALLATION RECOMMENDATIONS

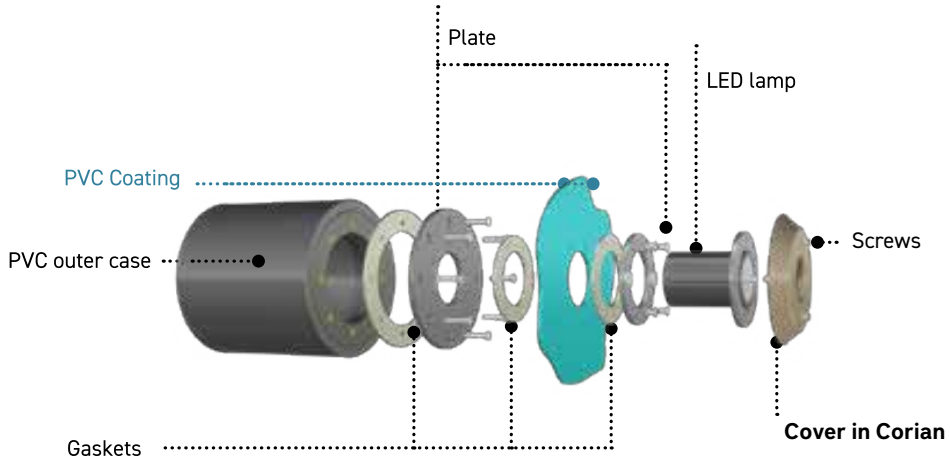

MICRO SQUID PVC coating exploded view.
The fixture consists of a cover, LED light, plate, gasket, PVC coating, and PVC cable box.

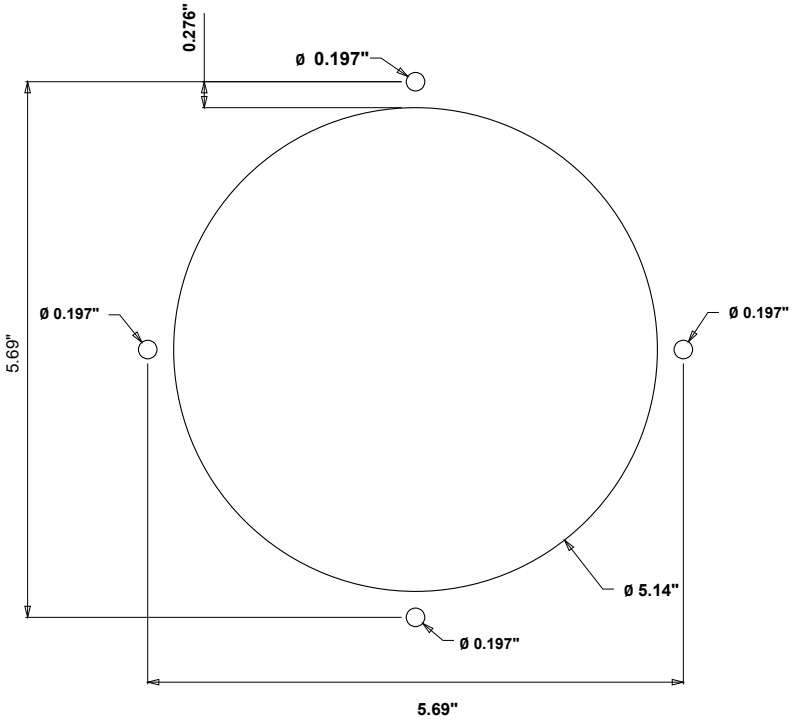

MICRO SQUID Panel Cutout.
Fixture cutout and drill hole pattern

© Copyright 2026 Designplan Lighting, Inc.

WIRING DIAGRAM

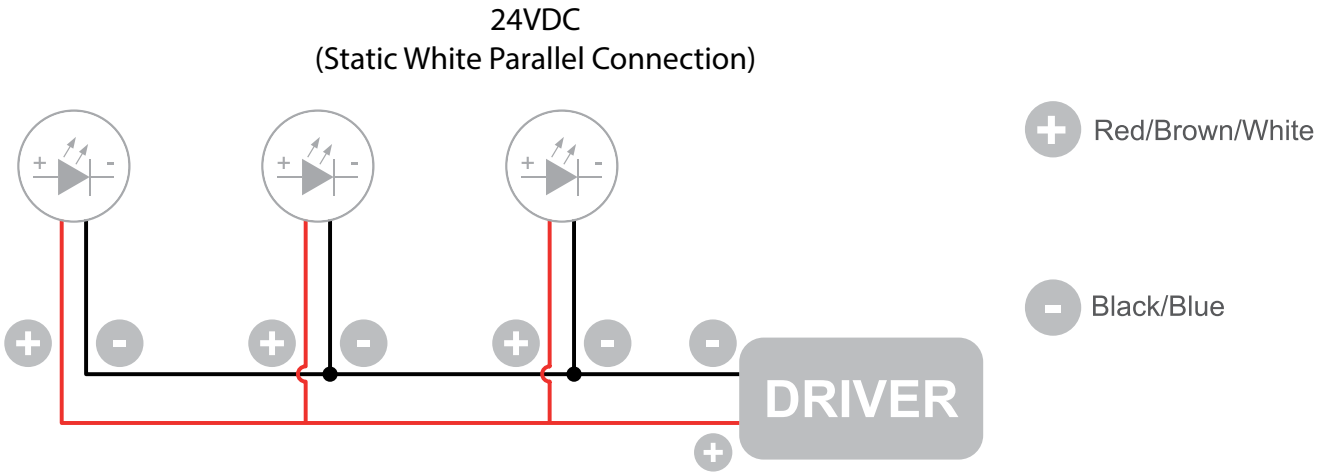

The individual lamps must be connected in parallel. Only power up the system once all the lamps have being connected.

Static White / Tunable White / RGBW

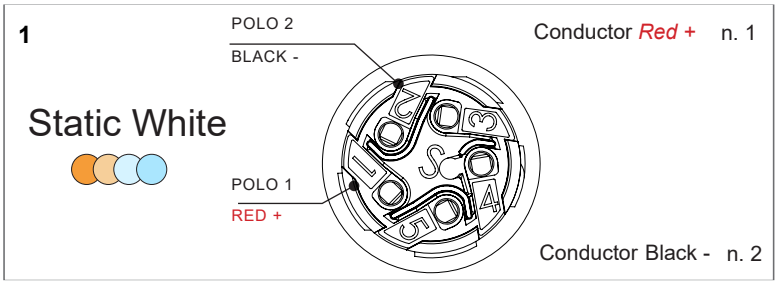

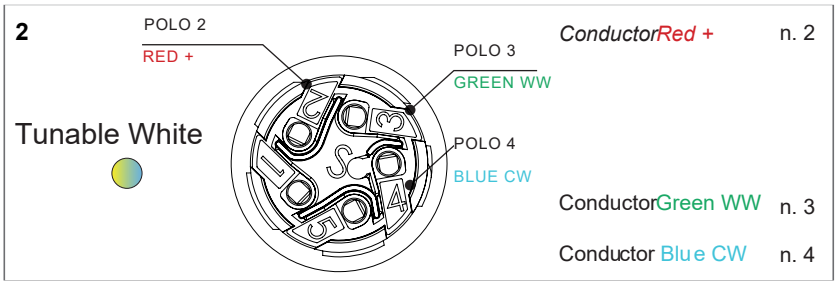

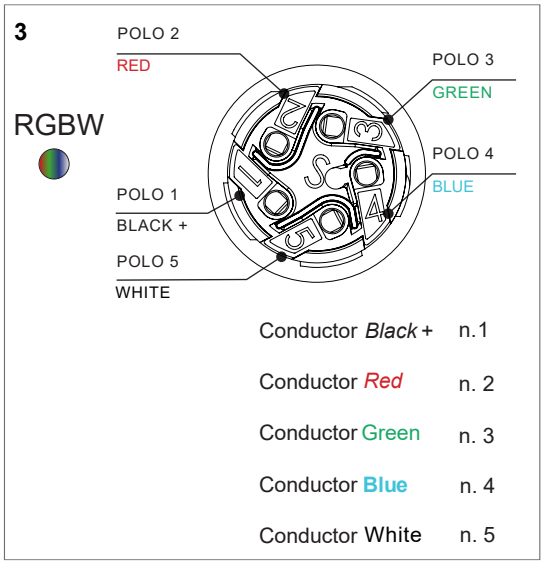

- Only power up the system once all the lamps are connected. Connecting an individual lamp to an active power supply may cause the lamp to break due to over-voltage.
- Lamps and power supply units must be installed in well-ventilated boxes or locations to allow a natural heat diffusion and avoid the devices overheating.
- On the power system, install a surge protection device to reduce the intensity of any voltage spikes to protect the lighting fixtures from the risk of damage.
- Fixture NOT suitable for covering with thermally insulating material.

sales@designplan.com
www.designplan.com

79 Trenton Avenue, Frenchtown NJ 08825

© Copyright 2026 Designplan Lighting, Inc.

P: 908-996-7710
F: 908-996-7042