BRIGHT 1.D

2.5W/3.3W, Remote 24VDC

installation instructions

INSTRUCTIONS PERTAINING TO RISK OF FIRE OR INJURY TO PERSONS. READ ALL INSTRUCTIONS. IMPORTANT SAFETY INSTRUCTIONS. SAVE THESE INSTRUCTIONS.

DANGER - RISK OF SHOCK - DISCONNECT POWER BEFORE INSTALLATION! Please read all instructions before installation.

- Keep these instructions for future reference.
- Must be installed by a qualified electrician in accordance with national and local standards. Designplan is not responsible for fixtures installed without regard to these standards.
- Unauthorized alterations or tampering of product voids warranty.
- The main power connection must be in accordance with local electrical codes.
- Suitable for OUTDOOR applications.

IP65 IP68 IK10

Electrical Connections:

- LED lights must be **connected in parallel** respecting polarities.
- **CHOOSE POWER SUPPLY ACCORDINGLY.** Please consider the voltage through which fixtures are fed as well as the max power consumption.
- **Connect power only if all the fixtures are connected.**
- The power supplies MUST be installed in aerated rooms, far from heat sources. Overworking or lack of air circulation will not permit natural dissipation.
- Use only Class 2 type electronic power supply.
- Never use switches on secondary circuit.

ATTENTION: **For Wall/Ceiling** - It is the contractor's responsibility to caulk around all the edges between the fixture and the mounting surface to satisfy wet label requirements.
For In-Grade - It is the contractor's responsibility to seal the conduit with "Great Stuff" aerosol seal that prevents water and moisture penetration for ultimate protection.
Contractor **MUST** use gel-filled wire nuts.

Maintenance

Scheduled maintenance must be carried out once a year on all lighting devices, regardless of appliance class and type of use. It must include the following operations:

- Periodically clean fixtures to remove dirt from gratings and screw heads.
- Check tightness of screws on various parts of the device.
- Check that all cable glands and cables are intact and tight. Check that the glass or plastic lens is intact, and replace it if broken or damaged.
- The internal components such as the ballast, driver, washers and screws must not show clear signs of oxidation or rust. Clear traces of rust and oxidation will indicate the presence of water inside the device.
- In the case of damage, the components must be replaced by original components or spare parts.

sales@designplan.com
www.designplan.com

79 Trenton Avenue, Frenchtown NJ 08825
© Copyright 2026 Designplan Lighting, Inc.
P: 908-996-7710
F: 908-996-7042

FIXTURE DIMENSION

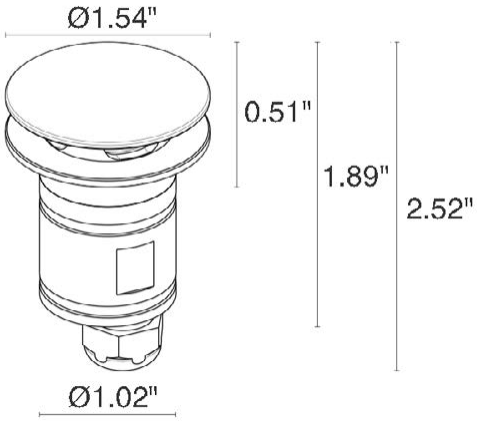

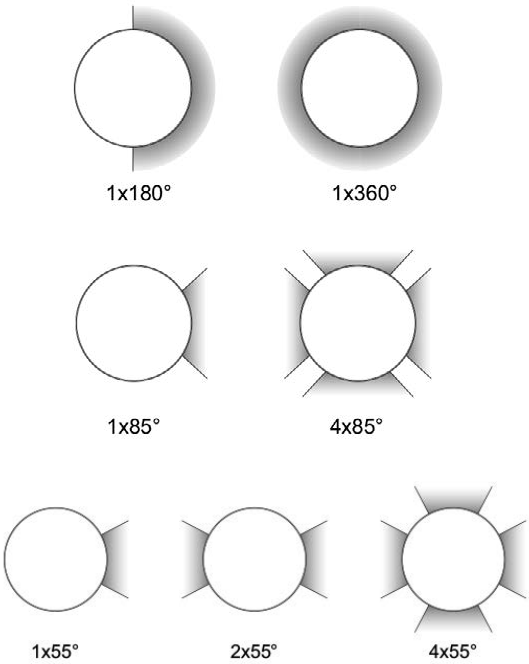

INSTALLATION INSTRUCTION

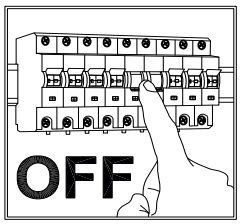

- It is the contractor's responsibility to caulk around all the edges between the fixture and the mounting surface, to satisfy wet label requirements.
- It is the contractor's responsibility to install Remote Driver in a suitable electrical enclosure.

© Copyright 2026 Designplan Lighting, Inc.

Housing Installation (WC0202)

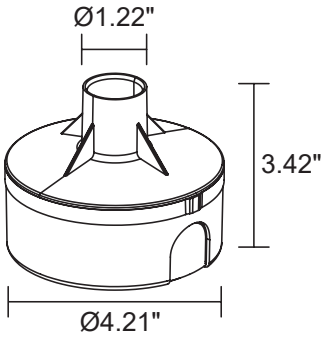

WC0202

1

Position flush to the finished floor!

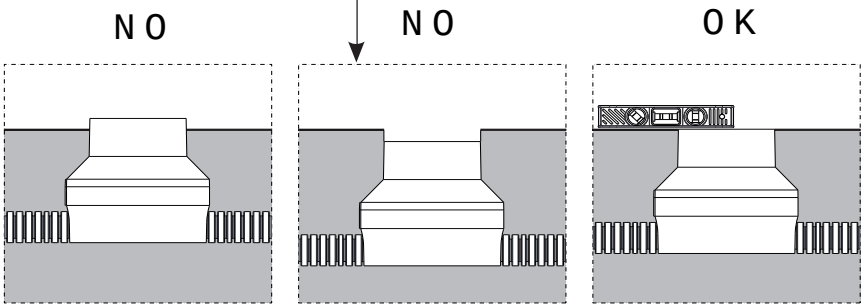

2

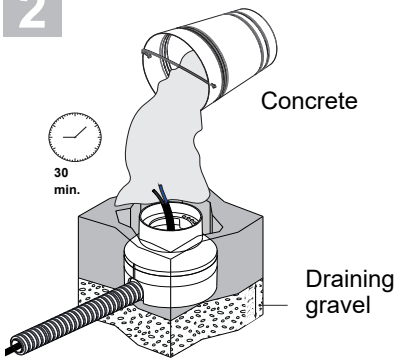

Always Use 7-12” of drainage gravel - check functionality: fill tube with water and verify full drainage within 30 min. If water remains, please utilize a different drainage system that functions properly. Contractor to seal the conduit with “Great Stuff” aerosol seal.

3

Outer casing plug

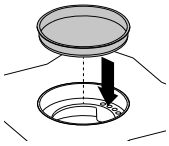

© Copyright 2026 Designplan Lighting, Inc.

- It is the contractor's responsibility to caulk around all seams of fixture to satisfy wet label requirements.
- It is the contractor's responsibility to install Remote Driver in a suitable electrical enclosure.

4

Package Contents

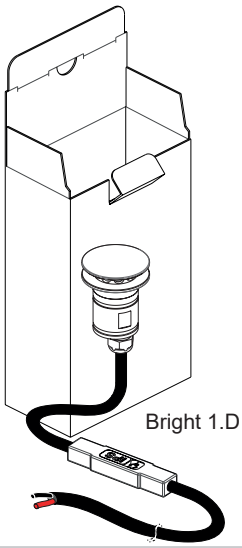

5

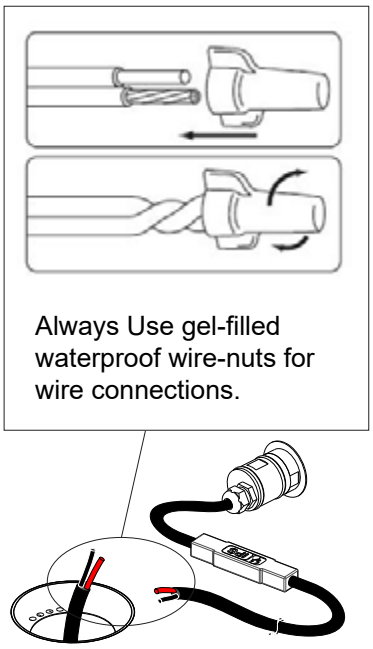

6

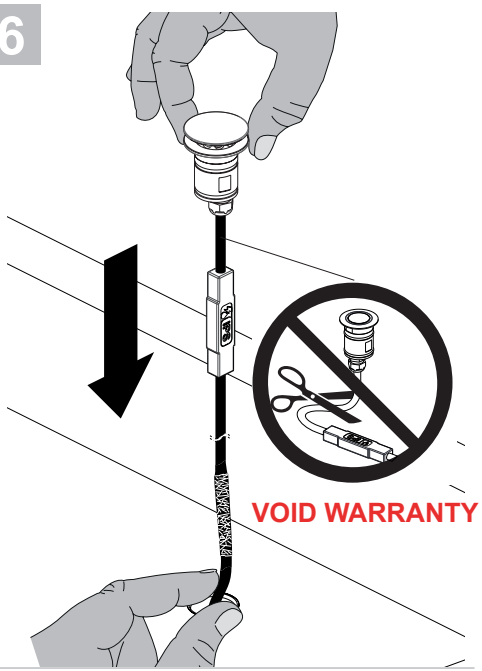

7 (WC0202)

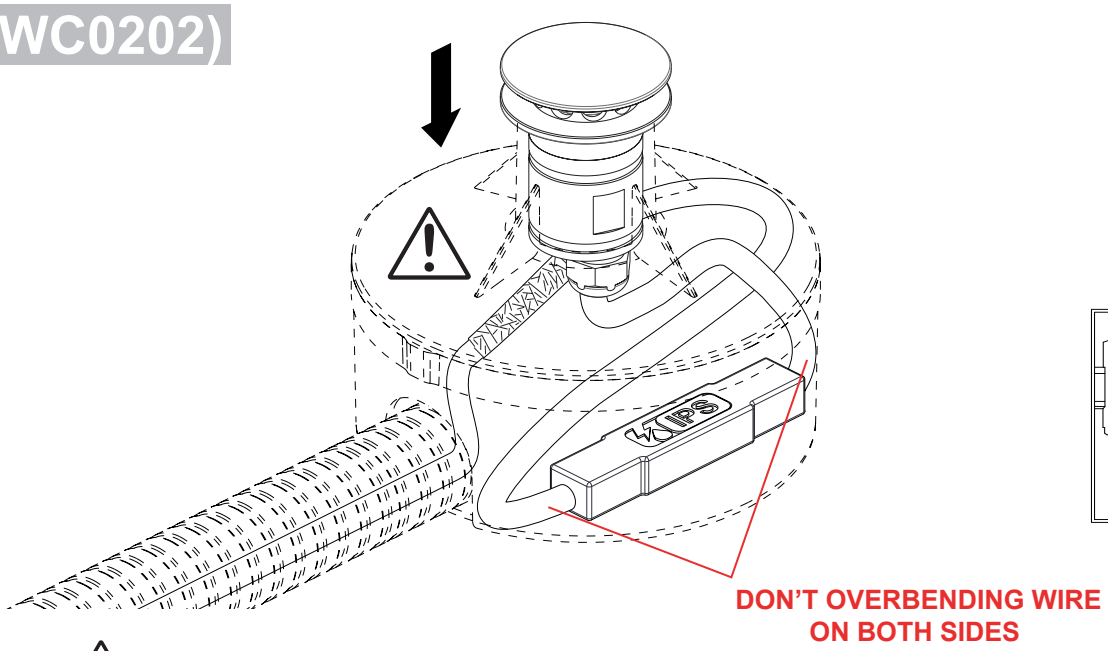

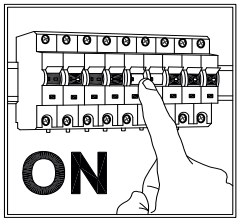

Use corrugated Ø 0.79" minimum (recommended Ø 0.98")

© Copyright 2026 Designplan Lighting, Inc.

In-Grade Housing Installation (PPMP02674)

PPMP02674

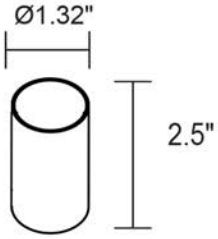

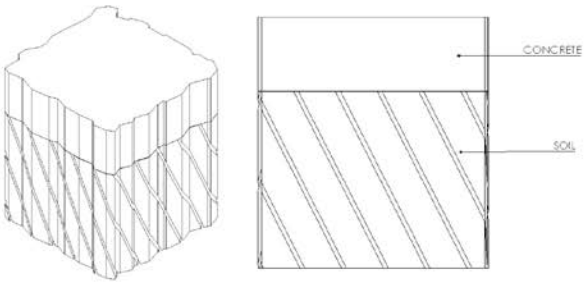

1 Drill pilot hole for core drilled housing through concrete and into soil below

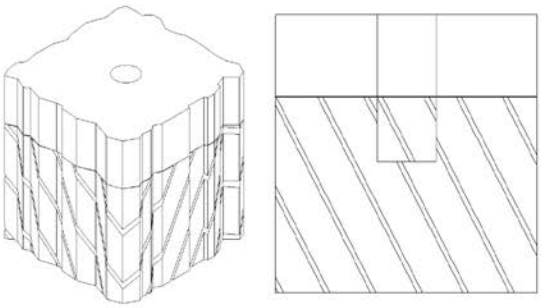

2 Create appropriate pathways through soil for running wires from fixtures to drivers

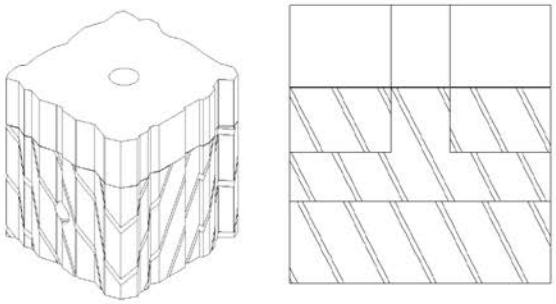

3 Apply epoxy to sides of newly drilled opening, insert core drilled housing into pilot hole and make level

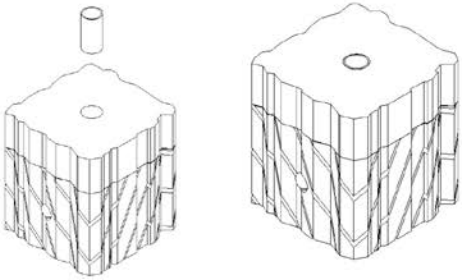

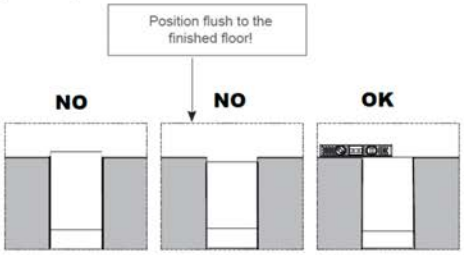

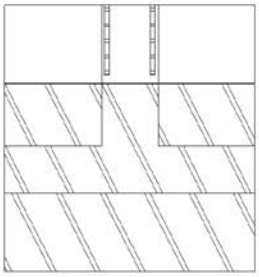

- Position core drilled application in place.
- Use epoxy to keep in place.

4 Insert fixture and guide wires through pathways to driver

- It is the contractor's responsibility to create appropriate underground pathways for wiring.

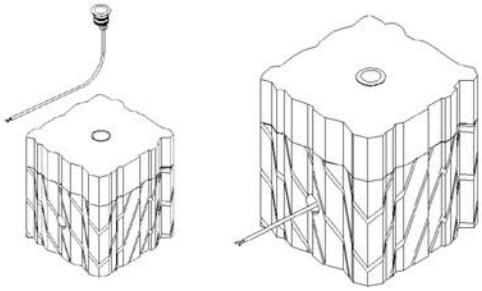

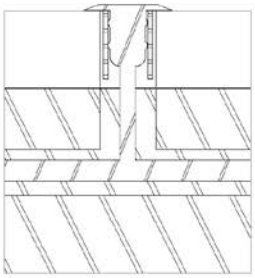

© Copyright 2026 Designplan Lighting, Inc.

Wiring Diagram

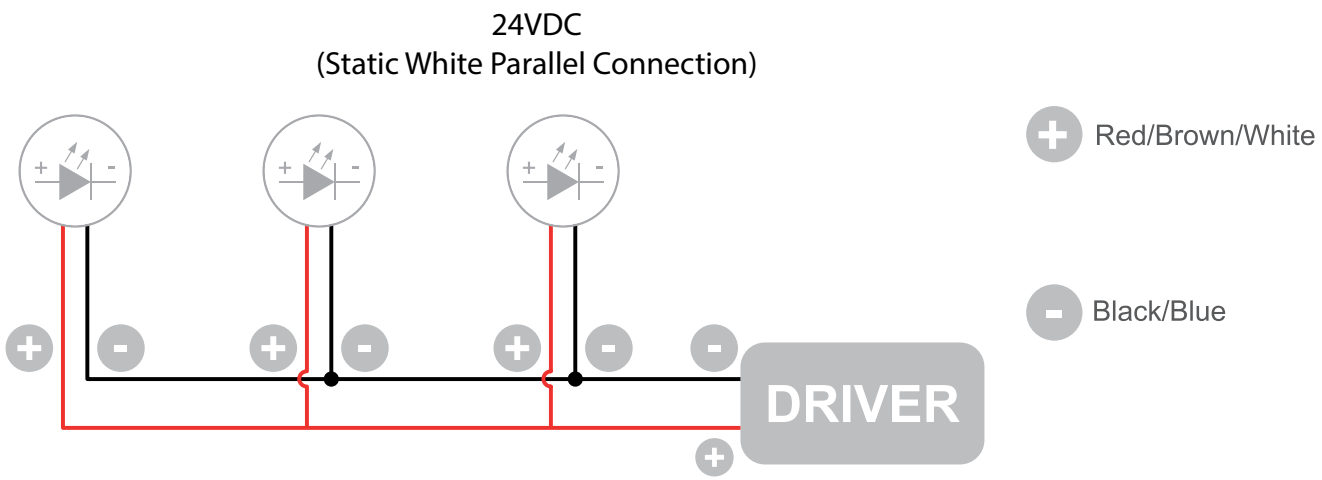

The individual lamps must be connected in parallel. Only power up the system once all the lamps have being connected.

- Only power up the system once all the lamps are connected. Connecting an individual lamp to an active power supply may cause the lamp to break due to over-voltage.
- Lamps and power supply units must be installed in well-ventilated boxes or locations to allow a natural heat diffusion and avoid the devices overheating.
- On the power system, install a surge protection device to reduce the intensity of any voltage spikes, to protect the lighting fixtures from the risk of damage.
- Fixture NOT suitable for covering with thermally insulating material

sales@designplan.com
www.designplan.com

79 Trenton Avenue, Frenchtown NJ 08825

© Copyright 2026 Designplan Lighting, Inc.

P: 908-996-7710
F: 908-996-7042