ITACA

REMOTE 24VDC

installation instructions

INSTRUCTIONS PERTAINING TO RISK OF FIRE OR INJURY TO PERSONS. READ ALL INSTRUCTIONS. IMPORTANT SAFETY INSTRUCTIONS. SAVE THESE INSTRUCTIONS.

DANGER - RISK OF SHOCK - DISCONNECT POWER BEFORE INSTALLATION! Please read all instructions before installation.

- Keep these instructions for future reference.
- Must be installed by a qualified electrician in accordance with national and local standards. Designplan is not responsible for fixtures installed without regard to these standards.
- Unauthorized alterations or tampering of product voids warranty.
- The main power connection must be in accordance with local electrical codes.
- Suitable for OUTDOOR applications.



IP66 IK07

Electrical Connections:

- LED lights must be **connected in parallel** respecting polarities.
- **CHOOSE POWER SUPPLY ACCORDINGLY.** Please consider the voltage through which fixtures are fed as well as the max power consumption.
- **Connect power only if all the fixtures are connected.**
- The power supplies MUST be installed in aerated rooms, far from heat sources. Overworking or lack of air circulation will not permit natural dissipation.
- Use only Class 2 type electronic power supply.
- Never use switches on secondary circuit.

ATTENTION: **For Wall/Ceiling -** It is the contractor's responsibility to caulk around all the edges between the fixture and the mounting surface to satisfy wet label requirements.
Contractor **MUST** use gel-filled wire nuts.

Maintenance

Scheduled maintenance must be carried out once a year on all lighting devices, regardless of appliance class and type of use. It must include the following operations:

- Periodically clean fixtures to remove dirt from gratings and screw heads.
- Check tightness of screws on various parts of the device.
- Check that all cable glands and cables are intact and tight. Check that the glass or plastic lens is intact, and replace it if broken or damaged.
- The internal components such as the ballast, driver, washers and screws must not show clear signs of oxidation or rust. Clear traces of rust and oxidation will indicate the presence of water inside the device.
- In the case of damage, the components must be replaced by original components or spare parts.

sales@designplan.com
www.designplan.com

79 Trenton Avenue, Frenchtown NJ 08825
© Copyright 2026 Designplan Lighting, Inc.
P: 908-996-7710
F: 908-996-7042

FIXTURE DIMENSIONS:

PLASTIC MOUNTING CASING BY REQUESTED

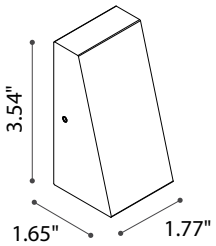

ITACA 45



(NOT NEEDED)

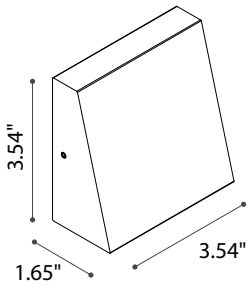

ITACA 90

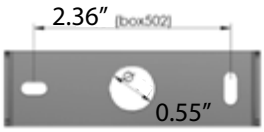

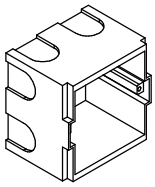

(#9018 /502)

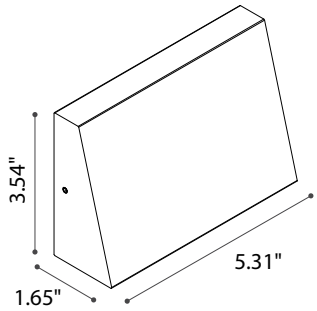

ITACA 135

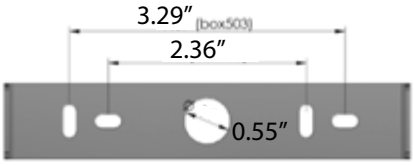

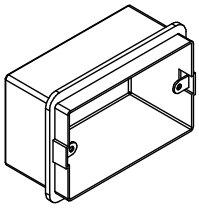

(#9019 /503)

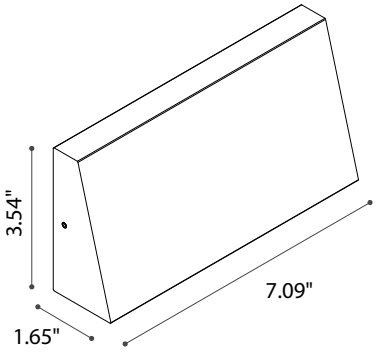

ITACA 180

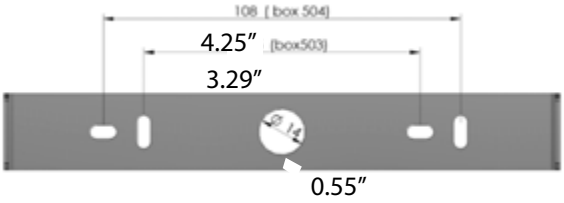

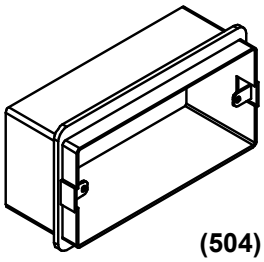

(504)

© Copyright 2026 Designplan Lighting, Inc.

FIXTURE INSTALLATION

1

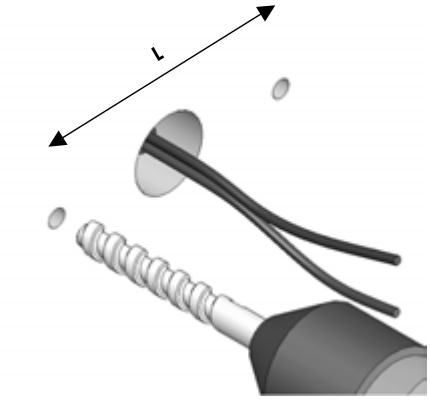

ITACA 45 Fixing Bracket:
" L " Vertical 1.38"

ITACA 90 Fixing Bracket:
" L " Vertical 2.36"

ITACA 135 Fixing Bracket:
" L " Vertical 2.36" or 3.31 "

ITACA 180 Fixing Bracket:
" L " Vertical 3.31" or 4.25"

2

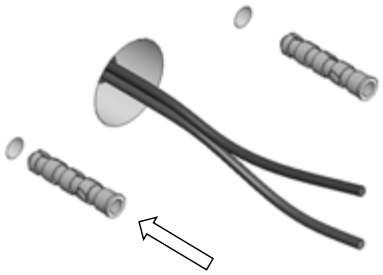

3

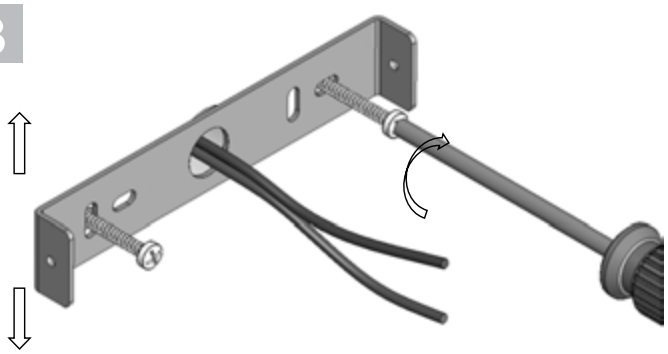

4

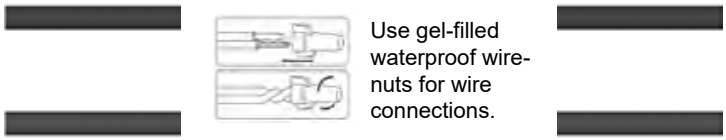

Use gel-filled waterproof wire-nuts for wire connections.

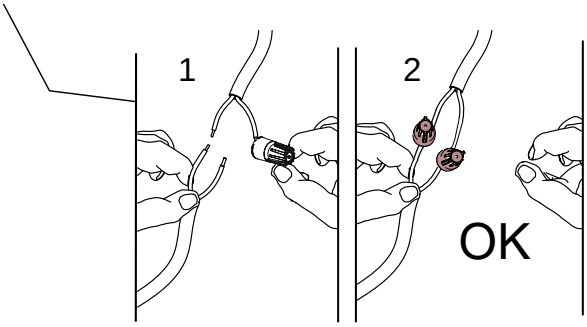

sales@designplan.com
www.designplan.com

79 Trenton Avenue, Frenchtown NJ 08825

© Copyright 2026 Designplan Lighting, Inc.

P: 908-996-7710
F: 908-996-7042

5

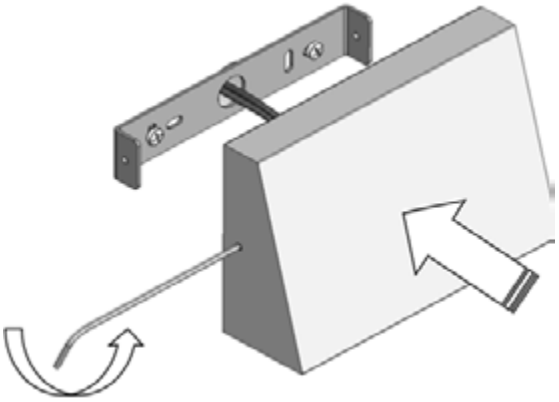

6

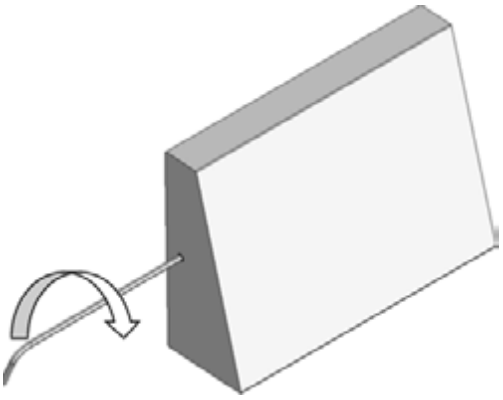

5A

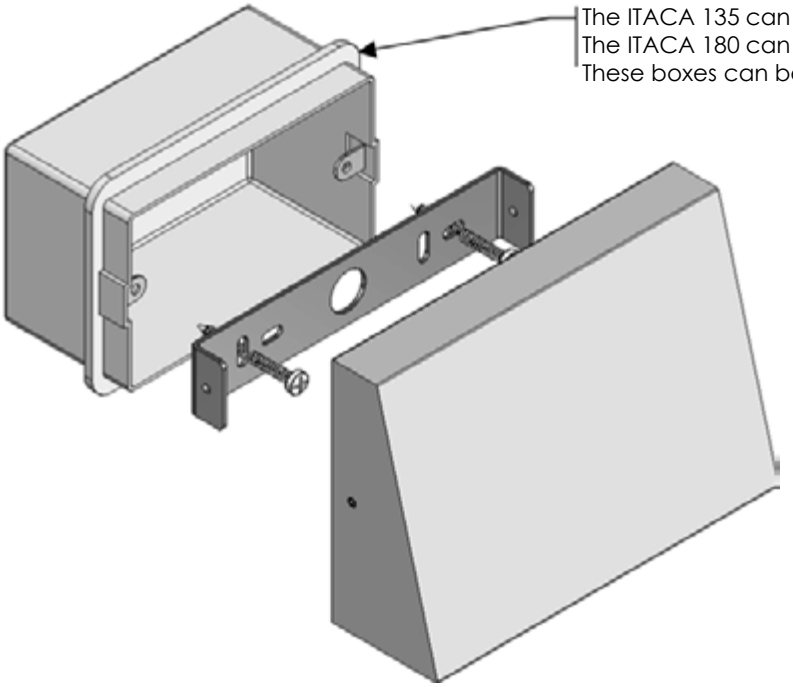

The ITACA 45 does not support this type of mounting.
The ITACA 90 can be mounted on a 502 box.
The ITACA 135 can be mounted on a 502 or 503 box.
The ITACA 180 can be mounted on a 503 or 504 box.
These boxes can be requested as accessories.

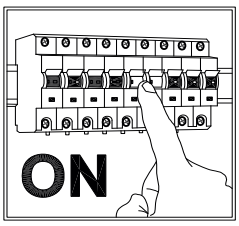

sales@designplan.com
www.designplan.com
79 Trenton Avenue, Frenchtown NJ 08825
© Copyright 2026 Designplan Lighting, Inc.
P: 908-996-7710
F: 908-996-7042

Wiring Diagram

Single Fixture Connection:

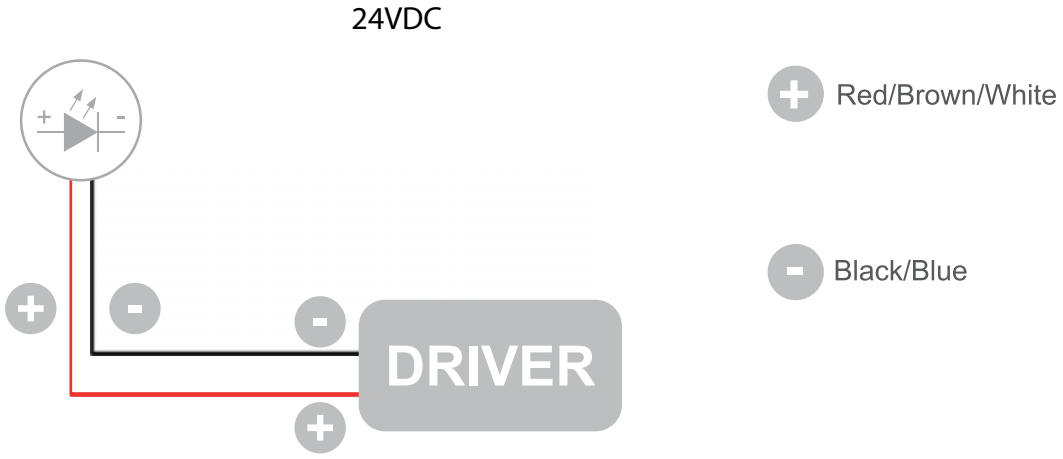

Multiple Fixtures Connection in Parallel:

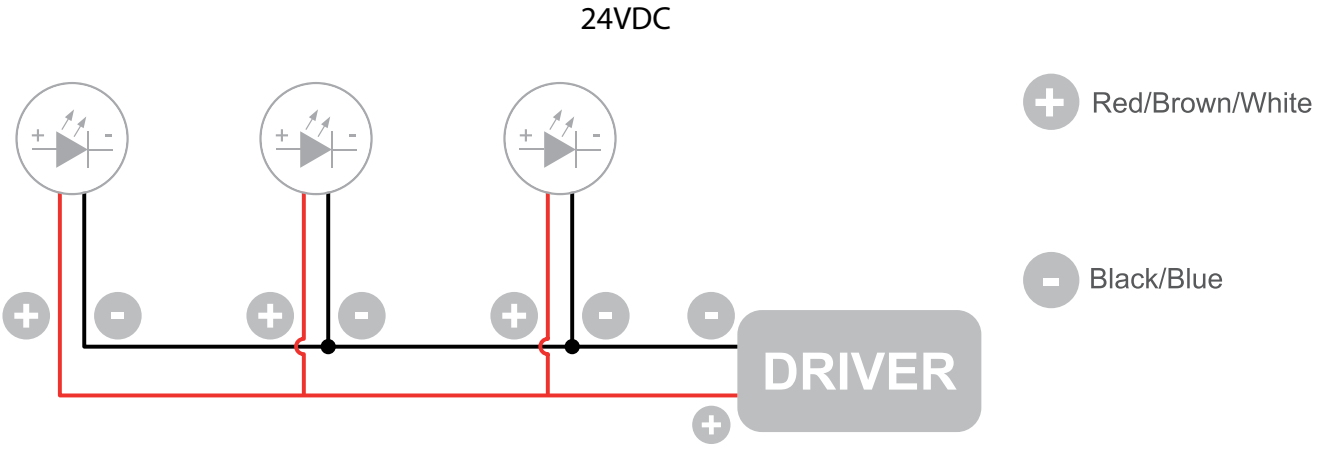

The individual lamps must be connected in parallel. Only power up the system once all the lamps have being connected.

- Only power up the system once all the lamps are connected. Connecting an individual lamp to an active power supply may cause the lamp to break due to over-voltage.
- Lamps and power supply units must be installed in well-ventilated boxes or locations to allow a natural heat diffusion and avoid the devices overheating.
- On the power system, install a surge protection device to reduce the intensity of any voltage spikes to protect the lighting fixtures from the risk of damage.
- Fixture NOT suitable for covering with thermally insulating material.

sales@designplan.com
www.designplan.com

79 Trenton Avenue, Frenchtown NJ 08825
© Copyright 2026 Designplan Lighting, Inc.
P: 908-996-7710
F: 908-996-7042