IKAR CEILING-SURFACE MOUNT

5W / 7W, INTEGRAL 120-277VAC

installation instructions

INSTRUCTIONS PERTAINING TO RISK OF FIRE OR INJURY TO PERSONS. READ ALL INSTRUCTIONS. IMPORTANT SAFETY INSTRUCTIONS. SAVE THESE INSTRUCTIONS.

DANGER - RISK OF SHOCK - DISCONNECT POWER BEFORE INSTALLATION! Please read all instructions before installation.

- Keep these instructions for future reference.
- Must be installed by a qualified electrician in accordance with national and local standards. Designplan is not responsible for fixtures installed without regard to these standards.
- Unauthorized alterations or tampering of product voids warranty.
- The main power connection must be in accordance with local electrical codes.
- Suitable for INDOOR applications.

IP20 IK02

ATTENTION: **For Wall/Ceiling** - It is the contractor's responsibility to caulk around all the edges between the fixture and the mounting surface to satisfy wet label requirements.
Contractor **MUST** use gel-filled wire nuts.

Maintenance

Scheduled maintenance must be carried out once a year on all lighting devices, regardless of appliance class and type of use. It must include the following operations:

- Periodically clean fixtures to remove dirt from gratings and screw heads.
- Check tightness of screws on various parts of the device.
- Check that all cable glands and cables are intact and tight. Check that the glass or plastic lens is intact, and replace it if broken or damaged.
- The internal components such as the ballast, driver, washers and screws must not show clear signs of oxidation or rust. Clear traces of rust and oxidation will indicate the presence of water inside the device.
- In the case of damage, the components must be replaced by original components or spare parts.

sales@designplan.com
www.designplan.com

79 Trenton Avenue, Frenchtown NJ 08825
© Copyright 2026 Designplan Lighting, Inc.
P: 908-996-7710
F: 908-996-7042

FIXTURE DIMENSIONS:

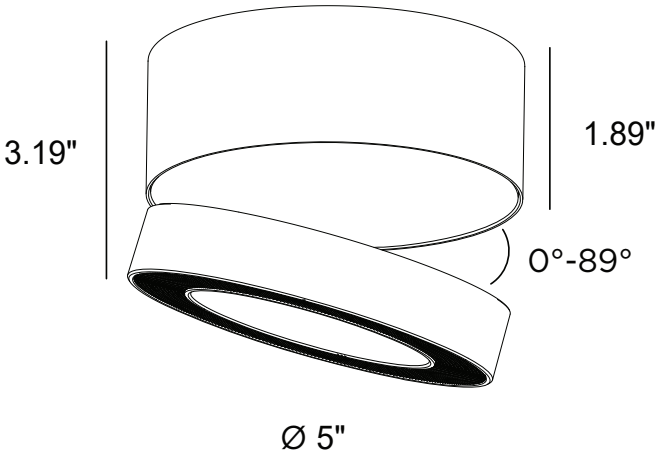

INSTALLATION INSTRUCTION:

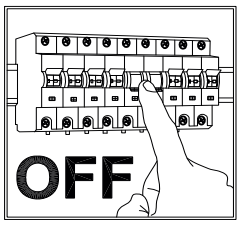

- It is the contractor's responsibility to caulk around all the edges between the fixture and the mounting surface, to satisfy wet label requirements.
- It is the contractor's responsibility to install Remote Driver in a suitable electrical enclosure.

© Copyright 2026 Designplan Lighting, Inc.

IKAR CEILING-SURFACE MOUNT

5W / 7W, INTEGRAL 120-277VAC

installation instructions

1

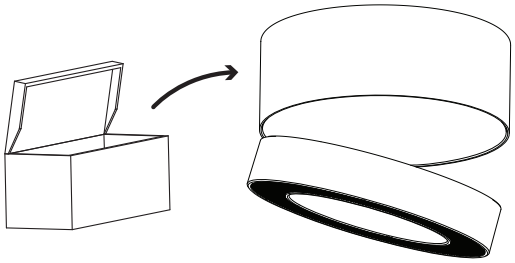

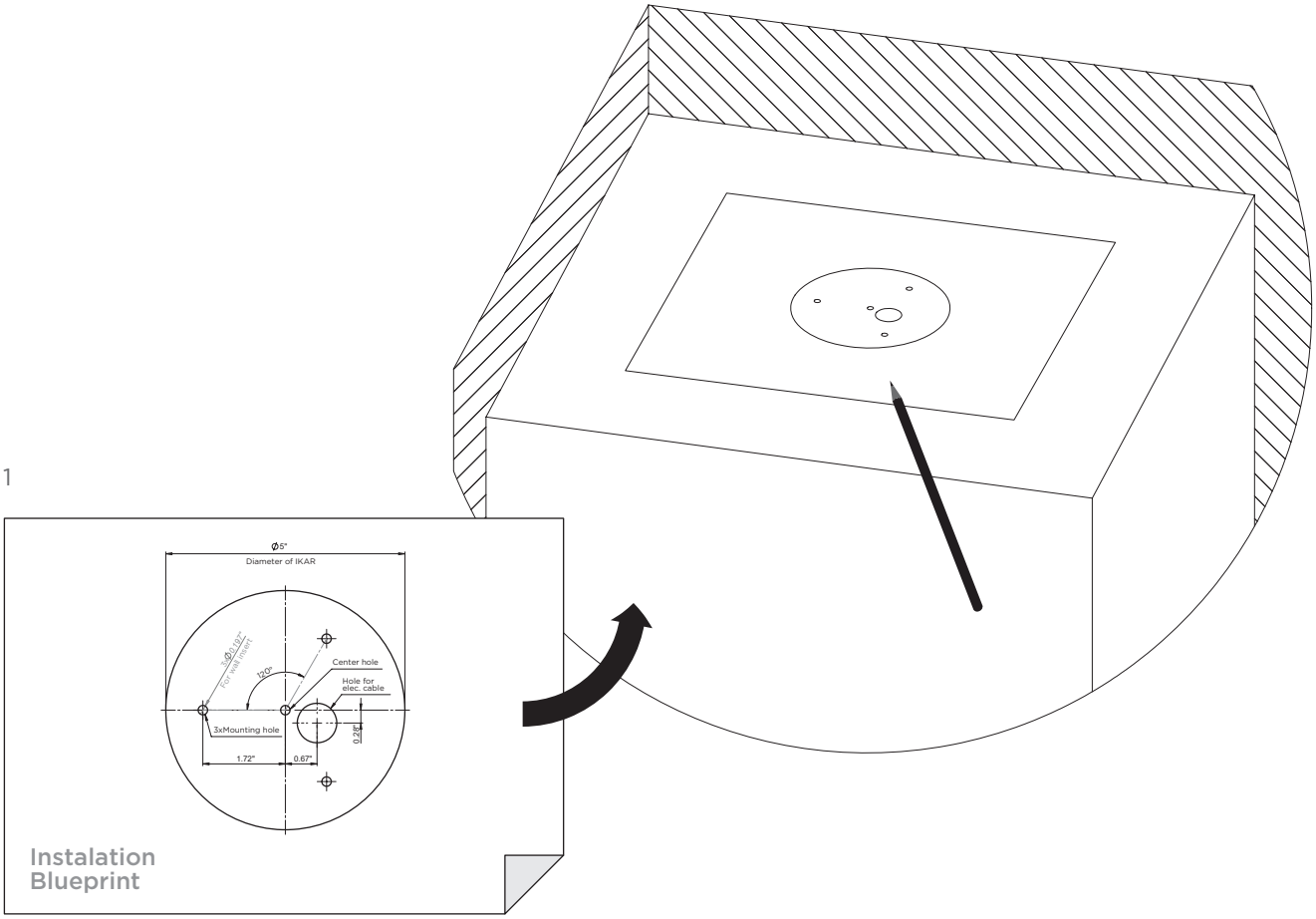

Take the blueprint from the box and place it on the ceiling to mark the holes.

sales@designplan.com
www.designplan.com

79 Trenton Avenue, Frenchtown NJ 08825

© Copyright 2026 Designplan Lighting, Inc.

P: 908-996-7710
F: 908-996-7042

2

Dismantle IKAR rotating it counterwise. IKAR is attached together with magnets.

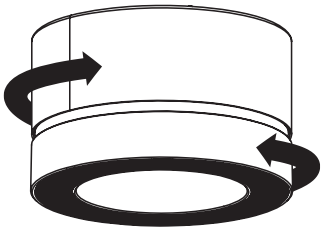

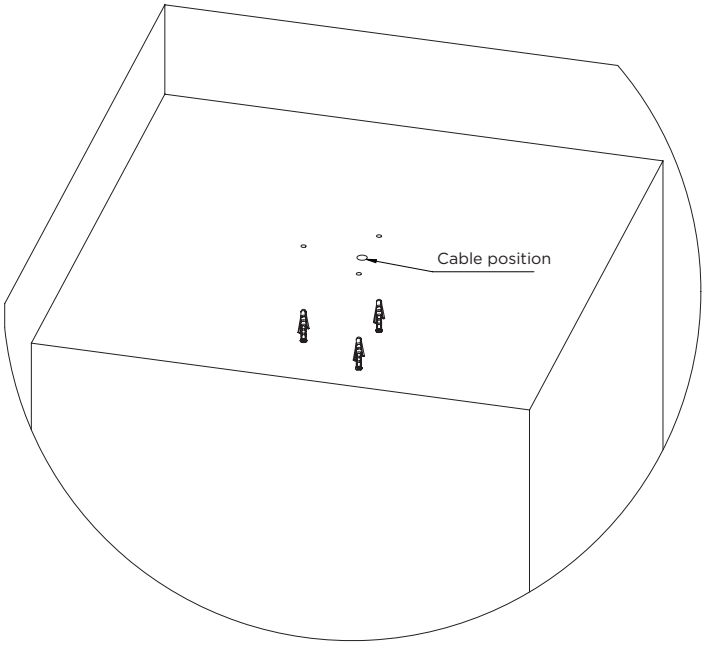

3

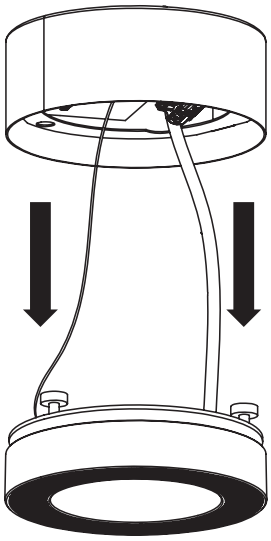

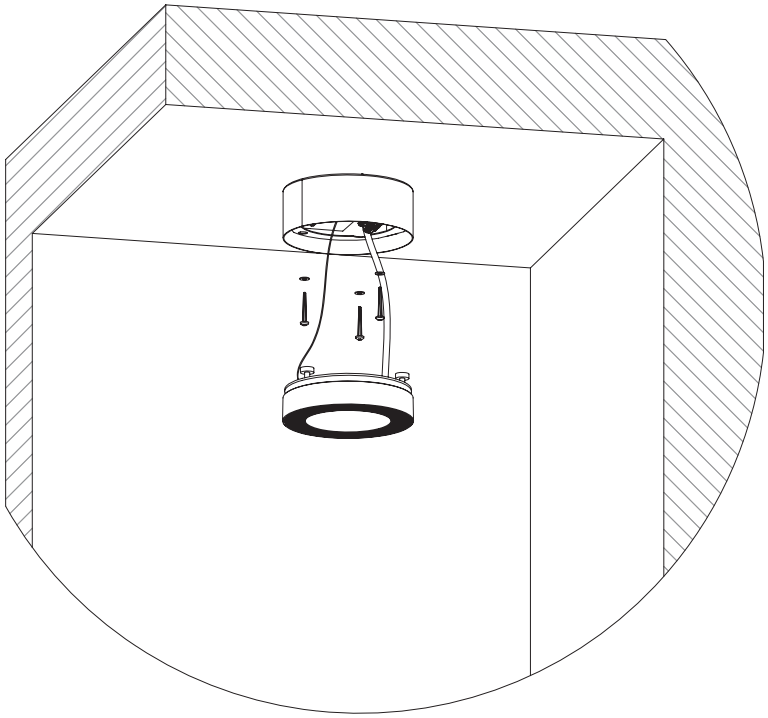

sales@designplan.com
www.designplan.com

79 Trenton Avenue, Frenchtown NJ 08825

© Copyright 2026 Designplan Lighting, Inc.

P: 908-996-7710
F: 908-996-7042

4

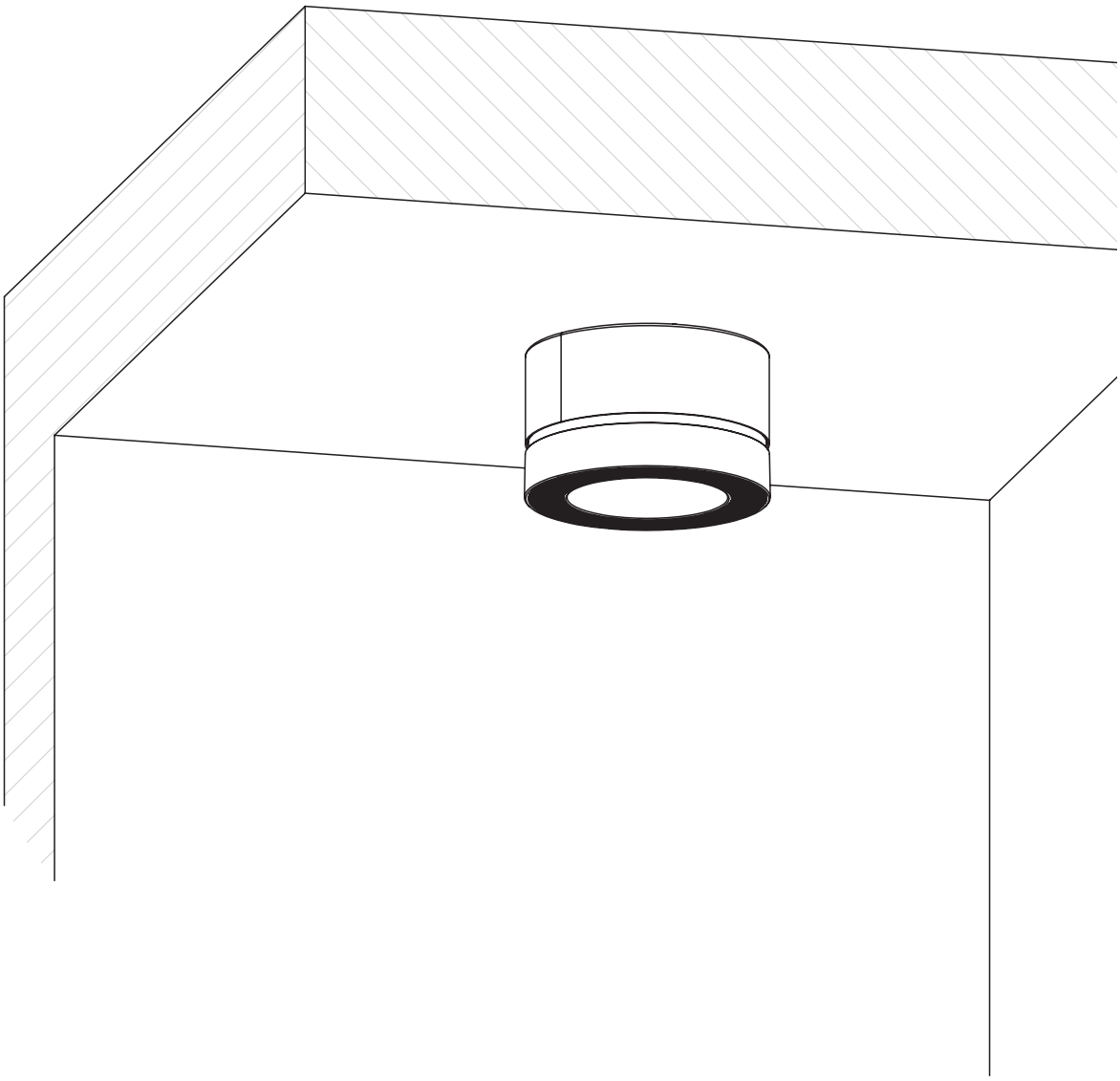

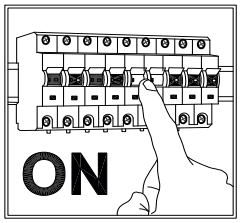

sales@designplan.com
www.designplan.com

79 Trenton Avenue, Frenchtown NJ 08825

© Copyright 2026 Designplan Lighting, Inc.

P: 908-996-7710
F: 908-996-7042