R-10-RGBW DOWNLIGHT

designplan®

datasheet

The R-10-RGBW is a vandal resistant, IP65 wet label downlight suitable for saunas AND steam rooms that is IC and Chicago Plenum rated. It is available with RGBW light and 2 optic options



MADE IN THE U.S.A.

Fixture Dimensions
(see drawing on page 2)

TECHNICAL DATA

Wattage / Input	10W (24VDC)
Power Supply	Remote, not included. See page 2.
Color Changing	DMX Decoder Built into Fixture DMX Controller (by others or see page 3 to order)
Construction	Body: 20 Ga. Cold Rolled Steel (Black Finish) Neck: Die Cast Aluminum Lens: 3/16" Thick Clear or Opal Polycarbonate
CCT	RGBW
Delivered Lumens	To Be Determined
Efficacy	To Be Determined
Optics	25°, 45°
Finishes	5 Standard, plus 4 Marine Grade. See Below.
Fixture Dimensions	Ø5.58" x 13.8 l x 8.06 h (see drawing on page 2)
Fixture Weight	9.2 lbs
LED Source	RGBW COB LED
Lumen Maintenance	L70>50,000hrs (Ta 25°C)
Color Consistency	2-Step MacAdam
IP Rating	IP65
Temperature Rating	Tested to 90°C room ambient

ORDERING INFORMATION

Example: R-10-RGBW-L26-RW-25-4-MTS-C-RMT-0. Power Supplies ordered separately.

R-10-RGBW-L26	-	RW	-		-		-		-	RMT	-	

Model #	CCT	Optics	Body	Finish	Lens	Dimming	Options
R-10-RGBW-L26	**RW** - RGBW	**25** - 25° **45** - 45°	**4** - Fully Recessed IC Rated **C** - Fully Recessed Chicago Plenum	**11** - White Suede **02** - Black Suede **18** - Tex. Bronze **TS** - Silver *Add prefix* **"M"** *to above colors for Marine Grade Clear Overcoat* **PN** - Polished Nickel *Marine Grade Clear Overcoat* ***NOT*** *available on Polished Nickel*	**C** - Clear **X** - Opal	**RMT** - Remote Required (See page 2 for power supply options)	**0** - None **4** - One Circuit Fusing **8** - Special Screws *(Please specify)* **H** - Honeycomb Louver

Job Name/Date:

Fixture Type Designation:

sales@designplan.com
www.designplan.com

79 Trenton Avenue, Frenchtown NJ 08825

© Copyright 2026 Designplan Lighting, Inc.
Published: November 25, 2026

P: 908-996-7710
F: 908-996-7042

FIXTURE DIMENSIONS

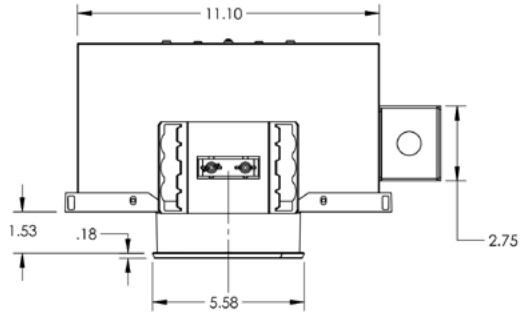

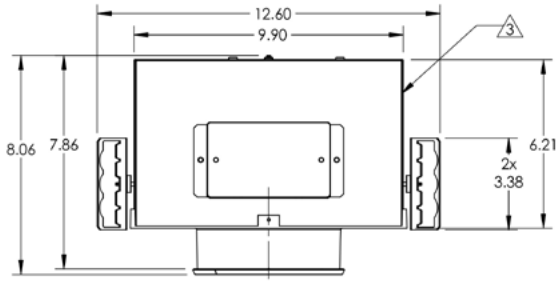

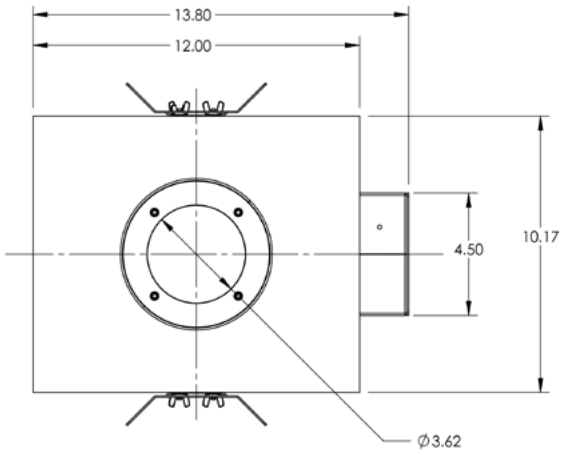

Job Name/Date:

Fixture Type Designation:

sales@designplan.com
www.designplan.com

79 Trenton Avenue, Frenchtown NJ 08825

© Copyright 2026 Designplan Lighting, Inc.

Published: November 25, 2026

P: 908-996-7710
F: 908-996-7042

R-10-RGBW DOWNLIGHT

datasheet

SUGGESTED POWER SUPPLIES

24VDC - RGBW

Part Number	Description	Input/Output	# of Fixtures
PPLT00681	Non-Dim	120-277VAC to 24VDC, 90W, Class 2, IP67	1-7

DRIVERS IN NEMA ENCLOSURE

Remote 24VDC



PPLT00715

Part Number	Description	Input/Output	# of Fixtures
PPLT00715	DMX Interface Integral to Fixture	120-277VAC to 24VDC, 96W, Class 2, WET/DAMP	1-7

For other power supply options consult factory.

PHOTOMETRIC DATA

Note all Photometry is 3000K

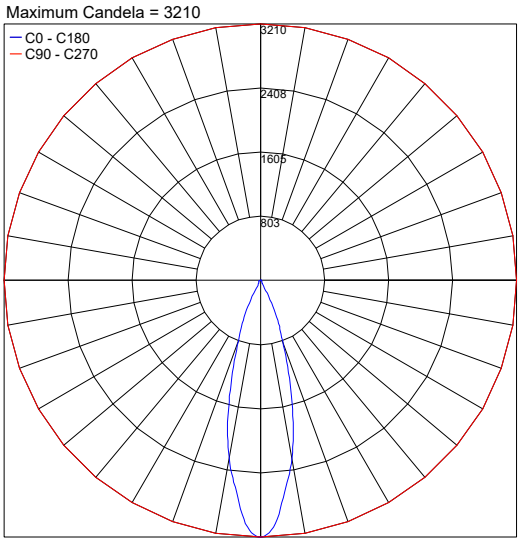

PHOTOMETRIC FILENAME : R-10-R 30K 25° CLEAR LENS - LLIA002183-001A.IES

ACCESSORIES

Controllers (RGBW)

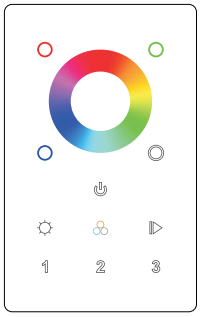

PPWD00570 - RGBW DMX512+Wifi Controller

Touch Sensitive
Can be controlled by WiFi
Controls 3 zones synchronously and separately

Job Name/Date:

Fixture Type Designation:

sales@designplan.com
www.designplan.com

79 Trenton Avenue, Frenchtown NJ 08825

© Copyright 2026 Designplan Lighting, Inc.

Published: November 25, 2026

P: 908-996-7710
F: 908-996-7042