STEP OUTSIDE 6.1

designplan

datasheet

The Step Outside 5 & 6 series are recessed LED wall-mounted spotlights, ideal for pathway and stair lighting. Available in 5 different styles (round and square) and 4 standard finishes.

Wall Cut-Out: Ø1.77”
Fixture Dimensions
2.05” l x 0.06” w x Ø2.17”

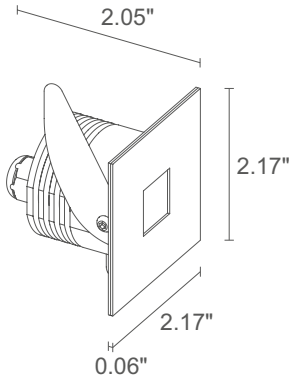

TECHNICAL DATA

Wattage / Input	2W (500mA)
Power Supply	Remote, not included. See page 2.
Construction	Body: Aluminum Trim: Stainless Steel Lens: Transparent Plexiglass Cable Length: 4.92’ standard
CCT	2700K, 3000K, 4000K, 5000K, Blue
CRI	>80
Delivered Lumens	29 lm (3000K, 500mA)
Efficacy	14.5 lm/W
Optics	Asymmetric
Finishes	White, Black, Cor-ten, Satin, Custom RAL (see below)
Cut-Out Dimensions	Ø1.77”
Fixture Dimensions	2.05” l x 2.17” w x 2.17” h
Fixture Weight	0.53 lbs
LED Source	1 Power LED
Lumen Maintenance	L90,B10 >50,000hrs (Ta 25°C)
Color Consistency	1/4 ANSI BIN
Operating Temp.	-4°F to +113°F
IP Rating	IP65
Impact Rating	—

ORDERING INFORMATION

Example: SP61129AAE or SP61129AAE-1. Accessories / Power Supplies ordered separately.

SP6112		**A**		
Model No.	**CCT**	**Optics**	**Finish**	**Cable Length**
SP6112	**F** - 2700K **5** - 3000K **9** - 4000K **0** - 5000K **1** - Blue	**A** - Asymmetric	**AE** - White **AN** - Black **AT** - Cor-ten **AS** - Satin **C** - Custom RAL Number Only NO STAINLESS STEEL *(consult factory for “C”)*	4.92’ standard **1** - 16.40’ **2** - 32.81’ **3** - 49.21’ 4 - 65.62’

Job Name/Date:

Fixture Type Designation:

sales@designplan.com
www.designplan.com

79 Trenton Avenue, Frenchtown NJ 08825
© Copyright 2019 Designplan Lighting, Inc.
Published: September 21, 2022
P: 908-996-7710
F: 908-996-7042

SUGGESTED POWER SUPPLIES

500mA

Part Number	Description	Input/Output	# of Fixtures
PPLT00497	Phase Dim (120V only)	120VAC to 500mA, 12W, Class 2	2-6
PPLT00465-P	0-10V Dimming to 1.0%	120-277VAC to 500mA, 20W, Class 2	1-10
PPLT00309-P	0-10V Dimming to 0.1%	120-277VAC to 500mA, 50W, Class 2	1-16
PPLT00538-P	0-10V Dimming to 0.1%	120-277VAC to 500mA, 100W, Class 2	1-48

Suggested Lutron Compatible

Part Number	Option	Lutron SKU	Dim Range	Description	Input/Output	# of Fixtures
PPLT00249	LTEA2W	LTEA	100%-1%	Hi-Lume™ 1% 2-Wire LED Driver (120V forward phase only)	120VAC to 500mA, 10W, Class 2	4-5
PPLT00259	L3DAE / L3DA3W	L3DA	100%-1%	Hi-Lume™ 1% EcoSystem™ or 1% 3-Wire LED Driver	120-277VAC to 500mA, 10W, Class 2	4-5
PPLT00195	L3DAE / L3DA3W	L3DA	100%-1%	Hi-Lume™ 1% EcoSystem™ or 1% 3-Wire LED Driver	120-277VAC to 500mA , 19W, Class 2	6-9
PPLT00180	L3DAE / L3DA3W	L3DA	100%-1%	Hi-Lume™ 1% EcoSystem™ or 1% 3-Wire LED Driver	120-277VAC to 500mA , 27W, Class 2	12-13
PPLT00250	LTEA2W	LTEA	100%-1%	Hi-Lume™ 1% 2-Wire LED Driver (120V forward phase only)	120VAC to 500mA, 27W, Class 2	12-13

For other power supply options consult factory.

ACCESSORIES

Installation

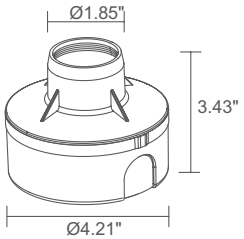

WC1501
Outer Casing

Job Name/Date:

Fixture Type Designation:

sales@designplan.com
www.designplan.com

79 Trenton Avenue, Frenchtown NJ 08825
© Copyright 2019 Designplan Lighting, Inc.
Published: September 21, 2022
P: 908-996-7710
F: 908-996-7042

PHOTOMETRIC DATA

Note all Photometry is 3000K

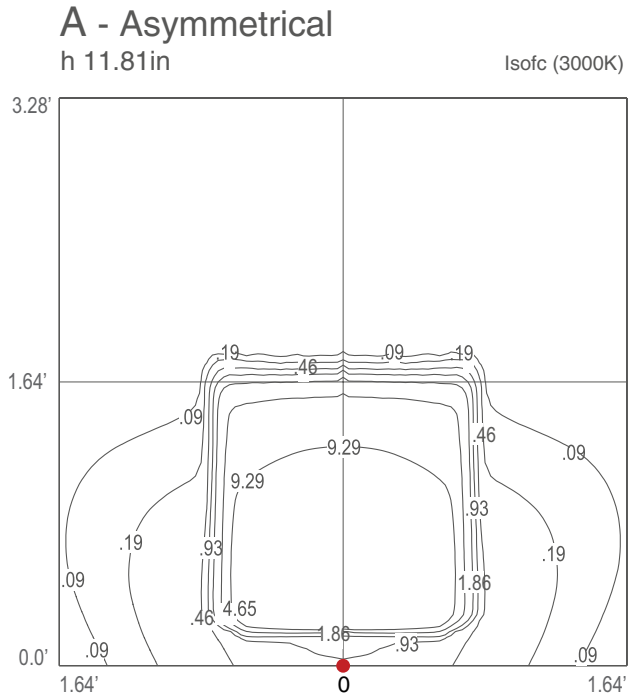

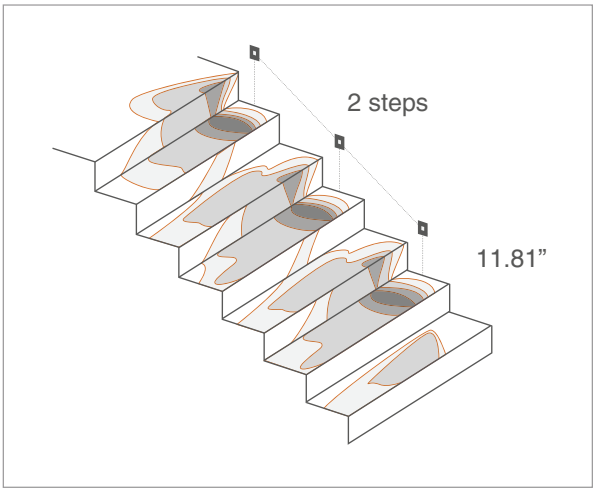

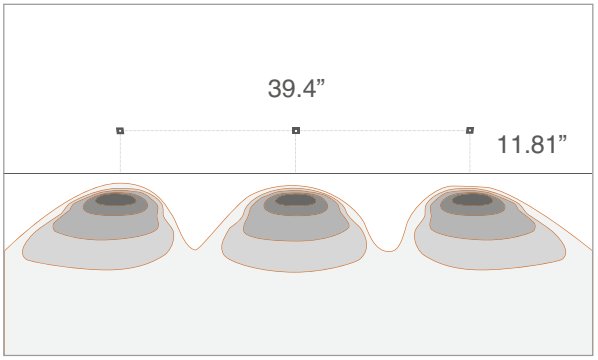

Job Name/Date:

Fixture Type Designation:

© Copyright 2019 Designplan Lighting, Inc.

Published: September 21, 2022